MLIM-7; FOUR / EIGHT CHANNEL ISOLATED ANALOG INTERFACE MODULE

Overview:

The MLIM-7 is an add-on Interface Module for use in conjunction with the ModuLogger System Base. It features four pairs of channels for analog input. Each pair of channels is fully isolated from the other pairs (as well as other ModuLogger circuitry). Paired inputs share a common. All of the channels can be individually configured to accept thermocouple, Vdc and mAdc inputs.

One of the channels in each pair has the additional capability to accept up to +/-30Vdc directly.

Channel Naming Conventions

Each of the four isolated pairs of channels is designated by a letter: A, B, C, or D. Each of the two channels in a pair are designated by a number: 1 or 2. For example, the first channel is Ch. A1. This results in the following channel names: A1, A2, B1, B2, C1, C2, D1 and D2.

Terminal Strip Number	Description
1	Channel A1 Input
2	A1 and A2 Common
3	Channel A2 Input
4	Channel B1 Input
5	B1 and B2 Common
6	Channel B2 Input
7	Channel C1 + Input
8	C1 and C2 Common
9	Channel C2 + Input
10	Channel D1 + Input
11	D1 and D2 Common
12	Channel D1 + Input

The individual channels can be programmed for the following input types and ranges with HyperWare and the hardware configuration switches (located on the interface module)

Thermocouple:

Type	Color (USA)	Range (F)	Range (C)
J	white/red	-60 to 1400F	-50 to 760C
K	yellow/red	32 to 2500F	0 to 1370C
E	purple/red	-150 to 1830F	-100 to 1000C
T	blue/red	-250 to 750F	-160 to 400C
R	black/red	32 to 1830F	0 to 1000C
S	black/red	32 to 3182F	0 to 1750C

Table 1: Thermocouple input types and ranges

DC Voltage:

Full Scale (FS) ranges:

Icon	Full Scale Input Ranges				
VDC-LO	+/- 23mV	+/-55mV	+/-100mV	+/-1.2V	+/-2.4V
VDC-HI	+/- 30V				

Table 2: DC Voltage input ranges

Input Impedance for the 30V ranges is >2.5 Megohm. All other range's input impedance is > 10 Megohm.

DC Current:

Full Scale (FS) ranges:

Icon	Full Scale Input Ranges			
mA-LO	+/-200uA	+/-500uA	+/-1.0mA	+/-11 mA
	+/-22mA			

Table 3: DC Current input ranges

Input resistance for all current ranges is a 100 Ohm precision shunt.

Module Installation:

Refer to the *Installation Section* in Chapter 3 for detailed installation instructions of the Interface Module onto the System Base.

I/O Module Layer Requirements / Limitations:

The MLIM-7 module can be installed in any of the five I/O Module positions The module layer address must be set on the module to correspond to the layer position into which the module is installed.

This address is programmed into the module through the use of the two Module Address Switch banks (Figure 1). Each switch bank contains 5 switches. Note the marking on the circuit board identifying address rows for Module Layers 2 through 5. Set one switch in each of the 2 banks ON

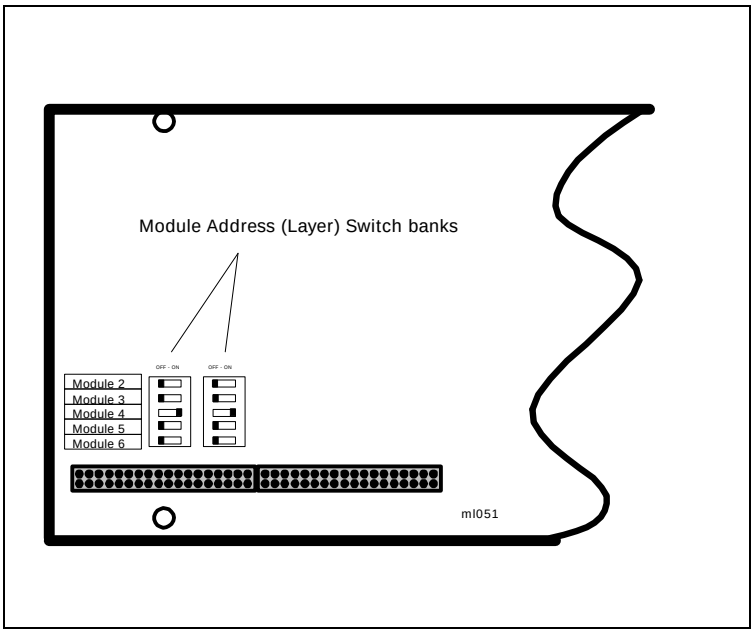

Figure 1: Example Address setting for Module Layer Position 4

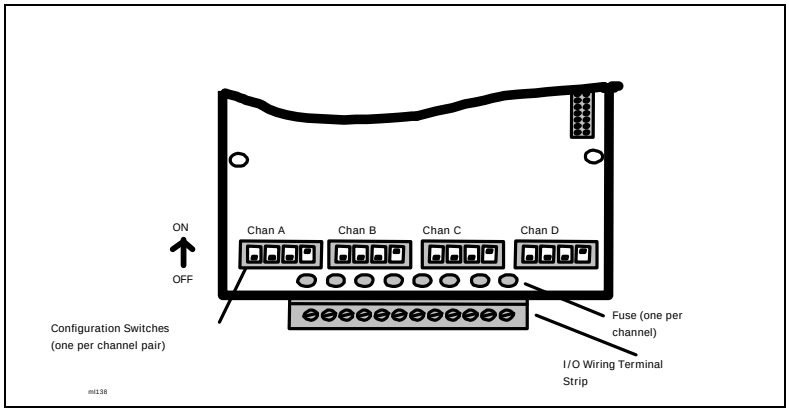

Figure 2: Channel configuration switches within the MLIM-7 Module

corresponding to a module layer determined above. Each switch bank should have only ONE switch ON and the other four switches OFF.

CAUTION: The switch banks may have different numbering than the circuit board... *insure that the marking on the circuit board is followed*... not the marking on the switch banks.

Hardware Input Signal Configuration Switches:

Four sets of Input Configuration Switches are provided for each of the four channel pairs (Figure 2). Through the use of these switches, various types of

signals can be directly fed into the ModuLogger eliminating the need for User supplied external precision dividers, shunts and other circuitry.

Although for most applications, an in-depth understanding of the function of these switches is not required, a simplified schematic of the input section of the MLIM-7 is provided in Figure 3**.**. As can be seen in this schematic, different combinations of the switches interject voltage dividers and shunts into the input stage of the Interface Module.

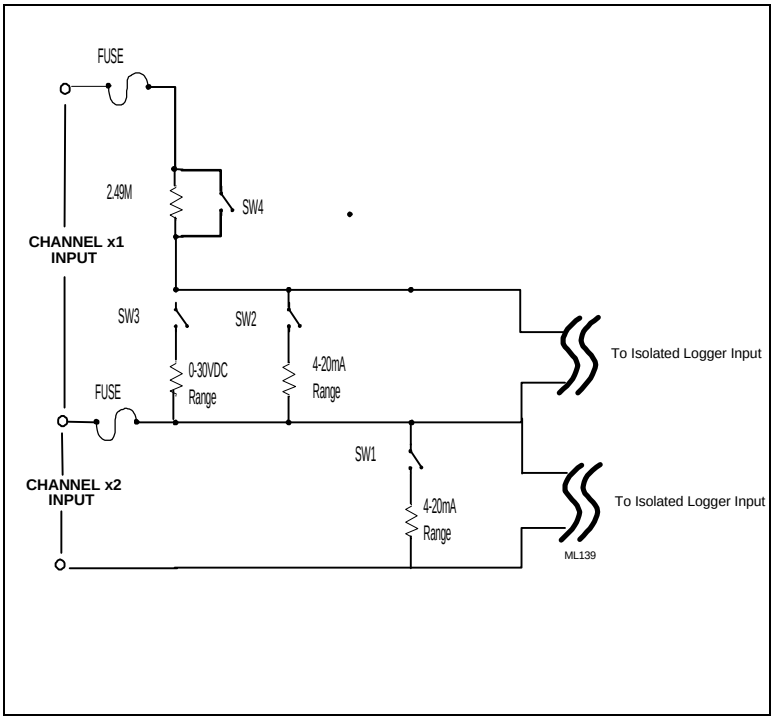

Figure 3 Simplified schematic of input section of MLIM-7 Module

The following reference chart provides the necessary information for configuration of the input switches. The switch settings are read by the ModuLogger during a query of the hardware configuration (from within HyperNet) so the User is not burdened with keeping notes of the current Module configuration. Improper setting of the switches will result in a `Bad Configuration' message on the LCD upon power-up of the ModuLogger. In the event that this message displays, check the switch settings per Table 4a and 4b and correct the conflict.

Switches SW2, SW3, SW4 control channels A1, B1, C1, D1

Input / Range	SW 2	SW3	SW4
VDC up through +/-30 VDC	OFF	**ON**	OFF
Thermocouples or +/-2 VDC	OFF	OFF	**ON**
All Current (mADC) Ranges	**ON**	OFF	**ON**

Table 4a: MLIM-7 Channels A1, B1, C1, D1 configuration switch settings

Switch SW1 controls channels A2, B2, C2, D2

Input / Range	SW 1	
Thermocouples or +/-2 VDC	OFF	**Channels A2, B2, C2, D2 can not be used for HIGH DC inputs. SW1 selects either Thermocouples/±2VDC or mADC only.**
All Current (mADC) Ranges	**ON**	

Table 4b: MLIM-7 Channels A2, B2, C2, D2 configuration switch settings

Note: Even if inputs A1, B1, C1, D1 are not being used the switches must be set to a valid configuration or a 'Bad Configuration' message will be generated.

MLIM-7 Channel Configuration via Software:

When an MLIM-7 channel is configured as a particular type of input via the module configuration switches, the configuration will be automatically detected during the development of a Program Net for the ModuLogger. Software input range configuration and utilization of the MLIM-7's channels in a Program Net is covered in Chapter 7 and within the Master Icon Listing in Appendix A.

Input Overcurrent Fuses:

Each channel is protected by a 125mA fuse as shown in Figure 3 (circuit) and Figure 2 (physical location on module). This fuse will protect the module from overcurrent surges received from malfunctioning or improperly connected sensors and transmitters.

In the event that a channel on a module quits responding with proper values, it may be an indication that this protective fuse has blown. The fuse can be removed from the circuit and checked for continuity with an ohm-meter and/or replaced with a Littelfuse P/N: 273.125 fuse available from Logic Beach Incorporated or many electronic distributors.

Commonly, this fuse is blown during installation of 4-20mA current channels where the power supply powering the 4-20mA transmitter is accidentally shorted directly across the logger input channel. To avoid this inconvenience, always check wiring prior to powering up system power supplies.

MLIM-7; THERMOCOUPLE APPLICATION

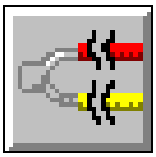

Thermo-couple Icon

Thermocouple Connection:

To utilize an MLIM-7 channel as a thermocouple input, configure that channel's Interface Module Configuration Switch per

Switches SW2, SW3, SW4 control channels A1, B1, C1, D1

Input / Range	SW 2	SW3	SW4
VDC up through +/-30 VDC	OFF	**ON**	OFF
Thermocouples or +/-2 VDC	OFF	OFF	**ON**
All Current (mADC) Ranges	**ON**	OFF	**ON**

Table 4. Channels configured as thermocouple inputs utilize two terminal strip connections per input; a Positive lead, and a Negative lead.

Connect the thermocouple positive and negative (red in USA) leads to the correct pair of terminals on the module terminal strip. Refer to Chapter 7 for steps to generate a Terminal Strip Wiring printout for use in making field wiring connections.

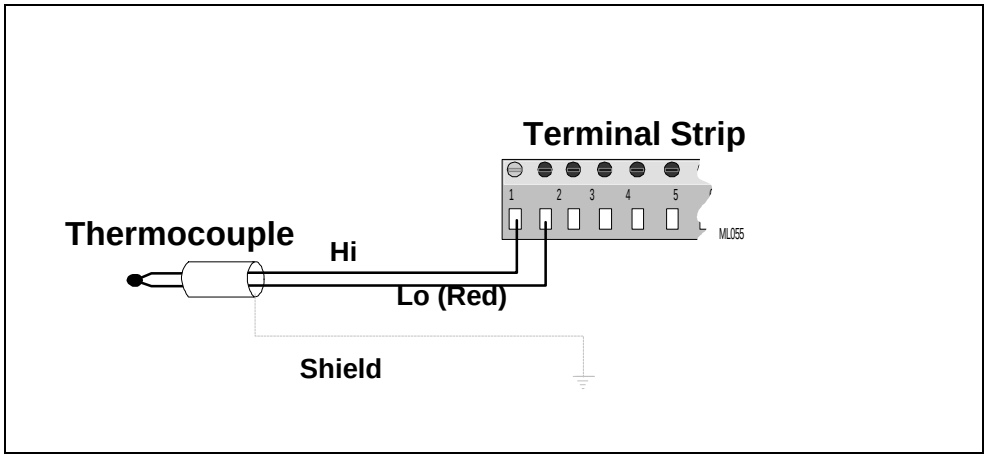

Figure 4: Thermocouple (and optional Shield) terminal strip connection

Polarity is critical.

Shielded thermocouple wire is recommended in electrically noisy environments for optimum signal protection. If shielded wire is used, the shield should be connected to an earth ground connection to conduct away noise picked up by the thermocouple shield (Figure 4).

Thermocouple Application Notes:

Cold Junction Compensation (CJC): For thermocouple measurements, the temperature of the terminal strip connections is required in the voltage to temperature conversion equation used by the ModuLogger. This temperature is measured by the CJC sensor located in the MLAD-1 module. Any differential temperature from the metal terminal strip connections to the

CJC sensor on the MLAD-1 circuit board will result in direct measurement errors.

The MLAD-1 is thermally designed to provide good CJC sensor vs terminal strip temperature tracking however, to minimize this potential error, avoid installations or effects that will induce extreme temperature differential. The most accurate readings will be achieved when the ModuLogger has been allowed to temperature stabilize. In rapidly changing temperature environments, additional accuracy can be achieved if the ModuLogger is housed within another enclosure providing better temperature equalization throughout the system.

MLIM-7; DC VOLTAGE APPLICATION

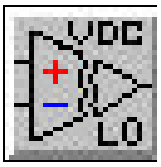

VDC- Lo Range Icon

The MLIM-7 can support two different major ranges (and several sub-ranges) of analog DC voltage input depending on the channel's hardware Configuration Switch setting (See

Switches SW2, SW3, SW4 control channels A1, B1, C1, D1

Input / Range	SW 2	SW3	SW4
VDC up through +/-30 VDC	OFF	**ON**	OFF
Thermocouples or +/-2 VDC	OFF	OFF	**ON**
All Current (mADC) Ranges	**ON**	OFF	**ON**

Table 4). To utilize an MLIM-7 channel as DC Voltage input, set that channel's Configuration Switch per Table 4 for the desired input signal range.

As shown in Figure 3, when DC-HI is selected with the hardware Configuration Switches, front-end divider circuitry is enabled. This circuitry attenuates the input signal to a range that can be handled by the MLIM-7 instrumentation amplifier section.

> ***TIP**: For best accuracy and absolute resolution, utilize the lowest range possible that will cover the input signal's dynamic range without over-ranging.*

Signal Connection (all Ranges):

Interface Module channels configured as VDC inputs provide two terminal strip connections per input; a Positive lead, and a Negative lead.

Connect the VDC signal positive and negative leads to the correct pair of terminals on the module terminal strip. Refer to Chapter 7 for steps to generate a Terminal Strip Wiring printout for use in making field wiring connections.

Observe polarity or the output signal will be reversed.

To minimize noise pickup on sensor wiring between the ModuLogger and the end sensor or signal source, 18 to 22 AWG shielded, twisted pair wire is recommended.

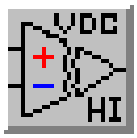

VDC-High Range Icon

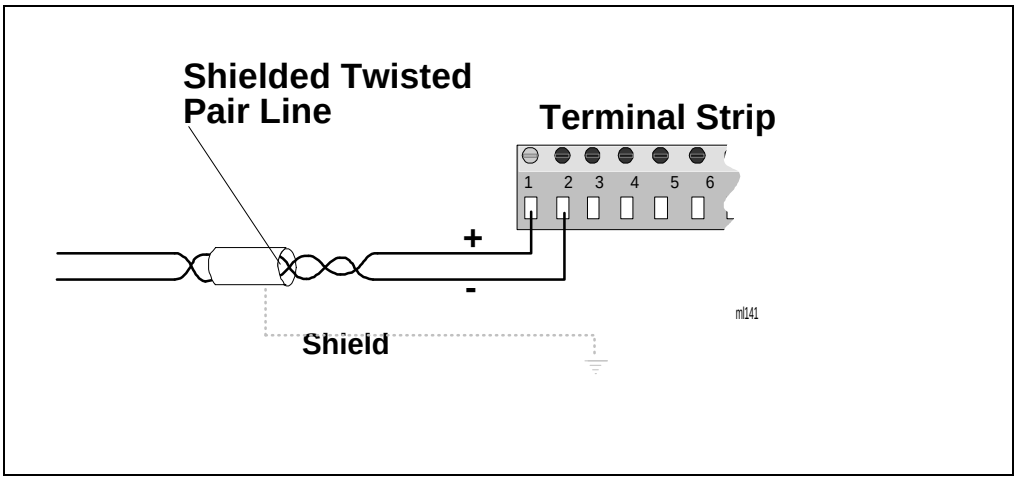

Figure 5: VDC signal (and optional shield) terminal strip connection

> ***FYI:*** *Shielded wire minimizes the amount of noise picked up by the internal conductors carrying the signals by providing an `electrical shell' or Faraday cage around the internal conductors.*
>
> *Twisted pair wiring exposes both conductors equally to the ambient electrical noise. This common-mode type noise is easier to reject by the Interface Modules input signal conditioning circuitry than un-balanced (or differential) noise.*

Shielding and/or twisted pair wire is especially recommended in electrically noisy environments for optimum signal protection. If shielded wire is used, the shield should be connected to an earth ground connection to conduct away noise picked up by the thermocouple shield (Figure 5). Only one ground wire is required as all of the Shield terminal strip connections are interconnected within the logger and routed to the MLAD-1 Chassis Ground terminal.

MLIM-7; DC CURRENT (MA-LO) APPLICATION

mA-Lo Icon

The MLIM-7 can accept DC Current within the ranges specified in Table 3. To utilize an MLIM-7 channel as a DC Current input, set that channel's Configuration Switch per

Switches SW2, SW3, SW4 control channels A1, B1, C1, D1

Input / Range	SW 2	SW3	SW4

VDC up through +/-30 VDC	OFF	**ON**	OFF
Thermocouples or +/-2 VDC	OFF	OFF	**ON**
All Current (mADC) Ranges	**ON**	OFF	**ON**

Table 4 as a **mA-LO** Channel.

As shown in Figure 3 when mA-DC is selected with the hardware Configuration Switches, a precision 100 Ohm burden resistor is enabled. The input signal is measured as a voltage across the shunt resistor.

> ***TIP**: For best accuracy and absolute resolution, utilize the lowest range possible that will cover the input signal's dynamic range without over-ranging.*

Signal Connection (all Current Ranges):

Interface Module channels configured as mA-LO inputs provide two terminal strip connections per input; a Positive lead, and a Negative lead.

Connect the mADC signal positive and negative leads to the correct pair of terminals on the module terminal strip (Figure 6).

Refer to Chapter 7; HyperNet Programming for steps to generate a Terminal Strip Wiring printout for use in making field wiring connections.

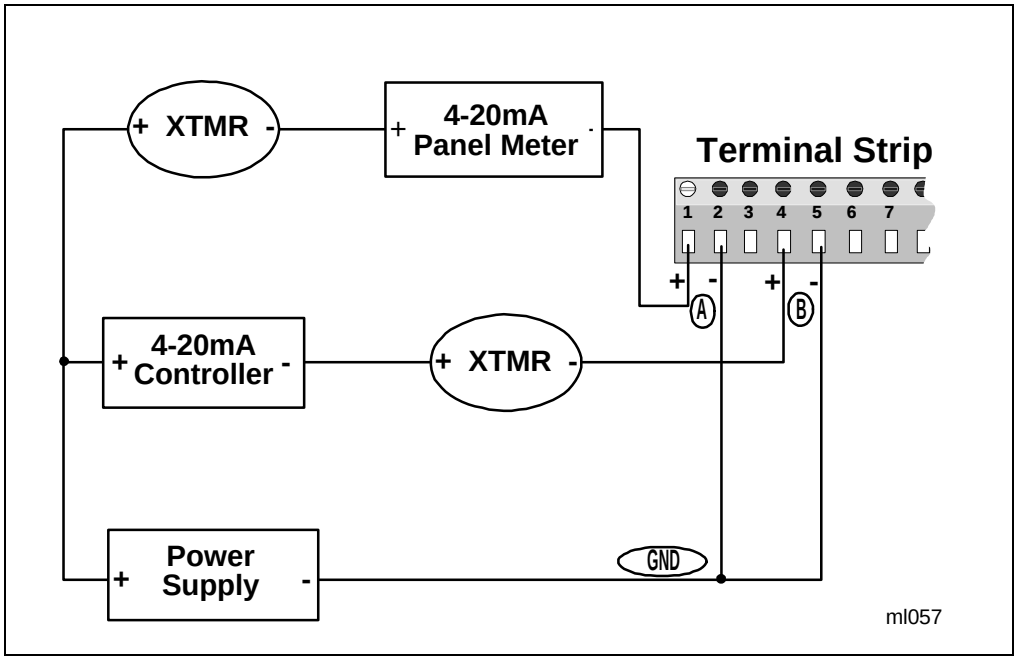

Figure 6: Terminal Strip connections for multiple 4-20mA inputs

Observe polarity or the output signal will be reversed.

To minimize noise pickup on sensor wiring between the ModuLogger and the end sensor or signal source, 18 to 22 AWG shielded, twisted pair wire is recommended. At the low current levels input to the MLIM-7, voltage drop in signal wiring is not a concern, however for extremely long runs, a voltage

drop analysis should be performed for the entire loop and if necessary larger gauge wire should be used.

> ***FYI:*** *Typically, with current signals (in contrast to low level voltage signals), noise pickup will be less due to the low impedance's involved in the circuit. However, in real-world applications, one should attempt to minimize noise on signal wires whenever possible... remember, Mother Nature loves to throw surprise parties.*
>
> *Shielded wire minimizes the amount of noise picked up by the internal conductors carrying the signals by providing an `electrical shell' or Faraday cage around the internal conductors.*
>
> *Twisted pair wiring exposes both conductors equally to the ambient electrical noise. This common-mode type noise is easier to reject by the Interface Modules input signal conditioning circuitry than un-balanced (or differential) noise.*

Shielding and/or twisted pair wire is especially recommended in electrically noisy environments for optimum signal protection. If shielded wire is used, the shield should be connected to an earth ground connection to conduct away noise picked up by the wiring shield (Figure 5). Only one ground wire is required as all of the Shield terminal strip connections are interconnected within the logger and routed to the MLAD-1 Chassis Ground terminal.

Input Overcurrent Fuses:

Each channel is protected by a 125mA fuse as shown in Figure 3 (circuit) and Figure 2 (physical location on module). This fuse will protect the module from overcurrent surges received from malfunctioning or improperly connected sensors and transmitters.

In the event that a channel on a module quits responding with proper values, it may be an indication that this protective fuse has blown. The fuse can be removed from the circuit and checked for continuity with an Ohm-meter and/or replaced with a Littelfuse P/N: 273.050 fuse available from Logic Beach Incorporated or many electronic distributors.