3... INTERFACE MODULES

By adding Interface Modules (Figure 3... -1), the ModuLogger System Base can be expanded for additional I/O channels, modem, display, PCMCIA memory, and battery operation. A full family of modules is available to meet most signal interface and/or feature requirements.

This section covers the installation, wiring, hardware configuration, and application considerations of the basic ModuLogger family of Interface Modules. As additional modules are added, the instruction sheets should be added to this section for reference.

Programming and use of added Interface Module channels is done with the HyperNet Program Net and is covered within Chapter 7 and the Master Icon Reference in Appendix A.

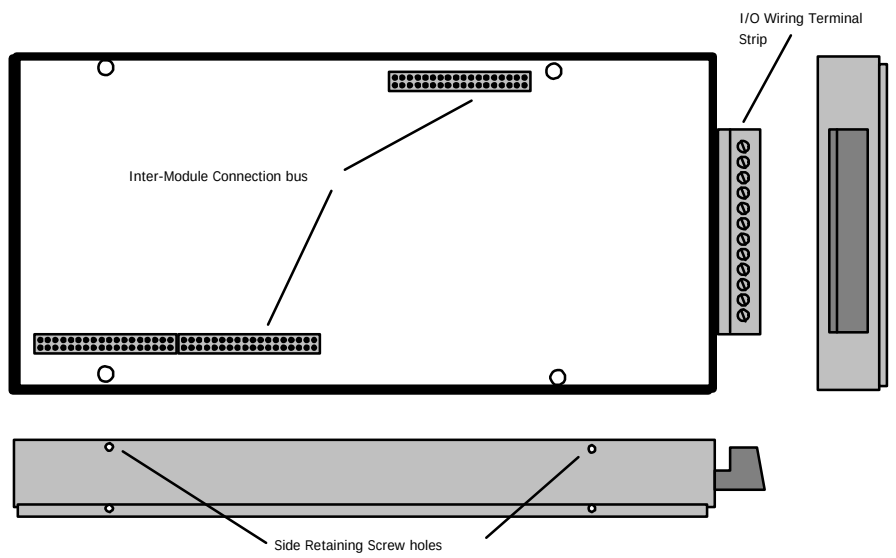

Figure 3... -1: Interface Module

HANDLING

As with all electronic systems, static electricity discharge can weaken or cause permanent damage to circuitry. Protective circuitry is integral to the ModuLogger system including the Interface Modules, however when the Interface Modules are not installed in the System Base, the protective circuitry is not effective. Therefore, when handling Interface Modules, it is recommended that reasonable static control procedures be followed.

- Before touching the Interface Module, discharge static electricity built up in your body be touching a grounded point such as a water faucet, cover plate screw on a receptacle, metal surface of a grounded appliance or other earth ground.
- Do not wrap or store the Interface Module in static generating materials such as untreated styrofoam packing `peanuts' or

plastic bags. Anti-Static bags are available for storage of static sensitive components.

INSTALLATION

When shipped, Interface Modules are provided with side screws and any necessary accessories. If ordered with a logger, the Interface Modules are typically factory installed in the System Base before shipment.

The Interface Modules stack onto the System Base building a `layered' logger to meet the User's needs. All modules (except the ML-BATT Battery Pack) have an inter-module connection bus that connects signals and power between the modules(Figure 3... -1).

To add a module, perform the following steps *and any special Installation Instructions detailed in the following Interface Module specific sections*.

1. Review the Interface Module instructions and observe any special installation instructions. These may include setting Module Address Switches and Input Configuration Switches.
2. Turn the ModuLogger System Power switch OFF.
3. Determine the Port (layer) at which the new Interface Module is to be installed. Refer to Figure 3... -4. Note that some modules must be installed at a particular position (eg the MLIM-5 must be installed between the MLCPU-1 and the MLAD-1 modules). **Also note that many modules require a Module address to be programmed through the setting of one or more Module Address Switches. This is covered in detail in the module specific sections that follow.**
4. Remove the four side retaining screws (Figure 3... -1) from the enclosure nearest the joint into which the new module is to added.
1. Carefully separate the layers while keeping them parallel (Figure 3... -2). Minimize the amount of twisting or rocking as this will result in bent connector bus pins.

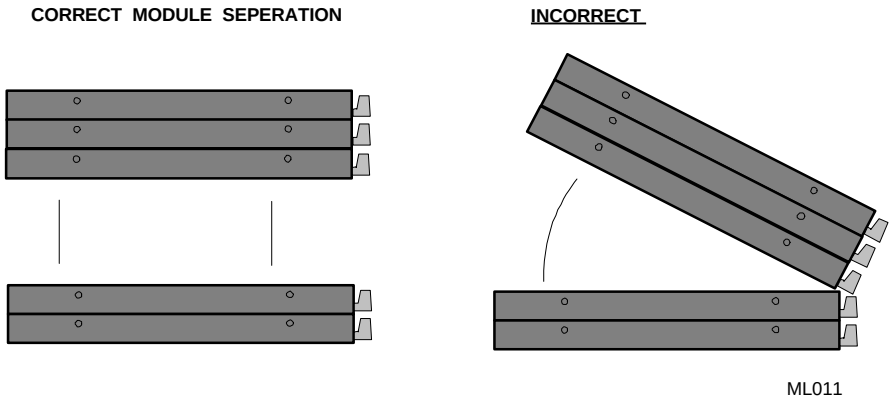

Figure 3... -2: Separating Modules without bending connector pins...

2. After separation, examing the gold connector bus pins on the Interface Module. These pins must be straight to insure proper

alignment and connection with the mating module. If any pins are bent, straighten them with a small pliers.

3. Orient the Interface Module to be added so that the similar length connector bus's align and the terminal strips or other User controls are all at the same end.
4. While peering into the gap between the modules, carefully match up the connector pins on one module and the mating socket on the other module and slide the two together. Examine the connectors from different views as the modules come together to insure that all of the pins are properly aligned.
5. Press the modules firmly together and reinstall the side access screws to hold the modules together.
1. Turn the logger power ON and observe the Feedback LED (Figure 3... -3) on the MLCPU-1 module. Within a few seconds, the LED should blink 5 times indicating that a system reset has been performed. This is also a fairly good indication that the unit has been reassembled correctly.

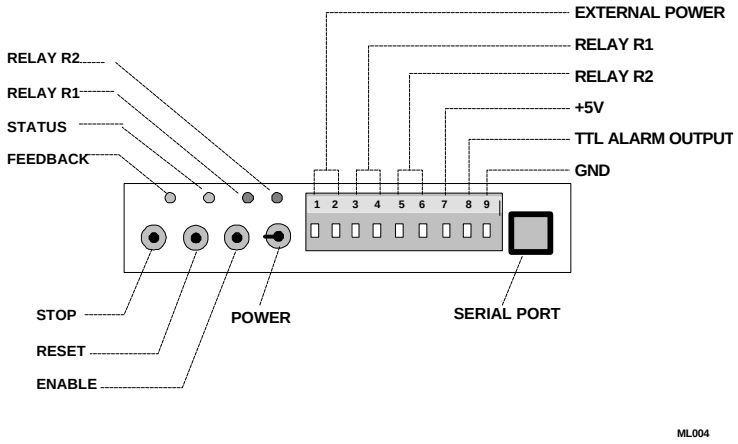

Figure 3... -3: Feedback LED on MLCPU-1

Alternatively, if the logger is equipped with the ML-DISP module, observe the LCD for normal operation and any error messages afer switching the power ON.
If an indication of proper operation is not seen, repeat the installation procedure, examining connector pins closely for bent or misaligned pins.

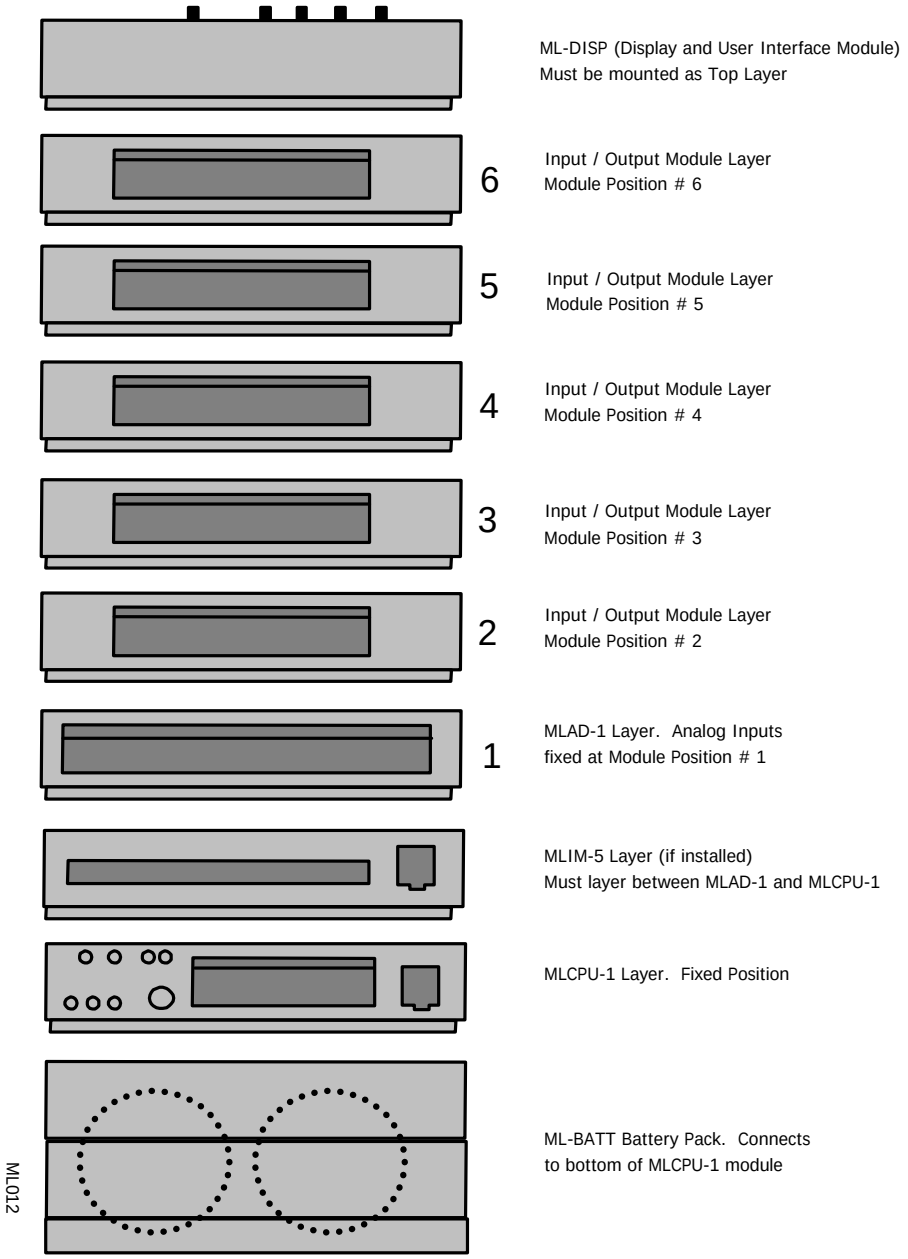

Figure 3... -4: Layer / Module Address Reference

INTERFACE MODULE OPERATIONAL INSTRUCTIONS:

Each Interface Module has specific characteristics and instructions for set-up and use that are unique to that particular module. These instructions are included in following sections or provided with the Interface Module at the time of purchase. As Interface Modules are added to a User's ModuLogger, the instruction sheets provided should be added to this section of the manual.

The instructions for most Interface Modules include both hardware and software details. Software instructions will commonly be referenced from other sections of this manual such as in the chapter on HyperComm for the modem modules and the chapter on HyperNet programming for analog and digital Interface Modules.

Instruction sheets for the following Interface Modules are currently included in this section:

- ML-BATT; Battery Pack Module
- ML-DISP; Display and User Interface Module
- MLIM-1; Analog (thermocouple, Vdc and Adc Interface Module (Configuration shared with MLAD-1 Module)
- MLIM-2; Event, Frequency, Count Interface Module
- MLIM-4; RTD, Thermistor, and Resistance Module
- MLIM-8; Digital Interface Module (8 channel digital I/O)
- MLIM-5 PCMCIA Memory Card Interface Module
- MLIM-5 PCMCIA Memory Card Interface Module with 2400B modem
- MLIM-5 PCMCIA Memory Card Interface Module with 14,400B modem

NOTES:

ML-BATT; BATTERY PACK MODULE

The ModuLogger can be equipped with the ML-BATT module to provide battery power for portable or remote site applications. The ML-BATT module includes two holders, each of which contains 3 D-cells, resulting in a nominal 9Vdc supply to the ModuLogger. The ML-BATT module fastens to the bottom of the MLCPU-1 module with 4 side screws. A pigtail and polarized connector facilitate quick connection to the mating connector provided on the MLCPU-1 module (Figure 3... -6).

Field Installation of the ML-BATT Module

Upon receipt of the module, examine the unit and insure that the batteries are firmly seated in their holders. The ML-BATT module fastens to the bottom of the MLCPU-1 module with 4 machine screws. The batteries must be installed (Figure 3... -5) with the *positive terminal toward the holder end marked with a red washer*.

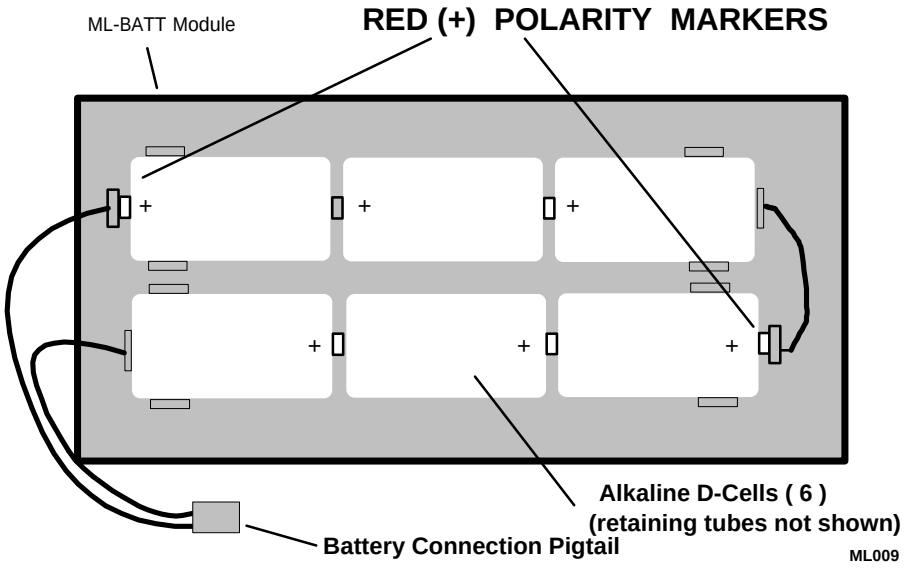

Figure 3... -5: ML-BATT Battery Pack Module

Remove the existing back plate installed on the ModuLogger by removing the 4 side screws and gently sliding the back plate off of the MLCPU-1 module. This back plate will be replaced by the ML-BATT module and is no longer required.

A foam spacer is provided to help hold the batteries in their holders. A slot is cut in the foam spacer. Route the wire pigtail extending from the MLCPU-1 through this slot. Connect the polarized connector on the end of the wiring pigtail in the ML-BATT module to the mating connector on the MLCPU-1 module.

Align and stack the ML-BATT and MLCPU-1 modules with the foam spacer against the MLCPU-1 printed circuit board and the connector on the ML-BATT side. Fasten the modules together with the four side retaining screws.

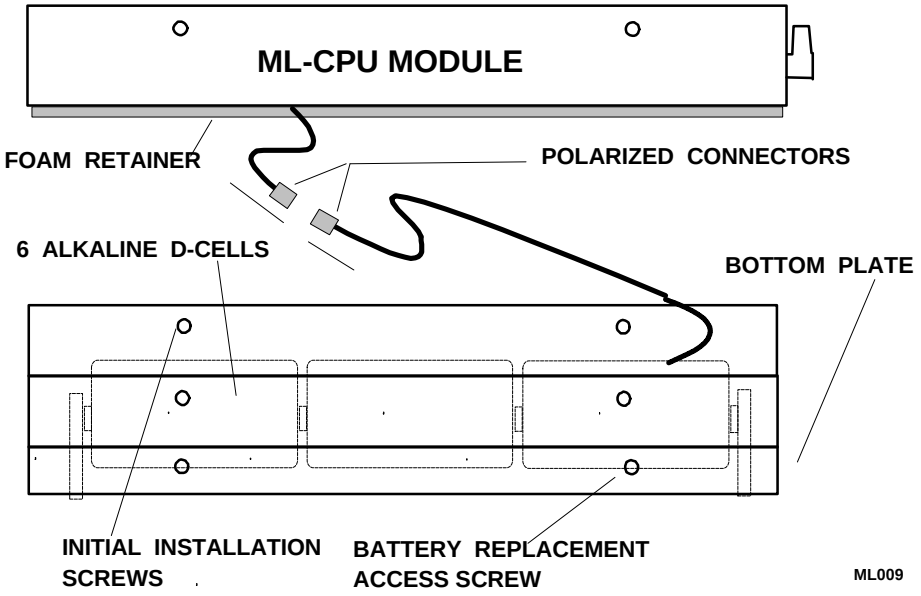

Figure 3... -6: ML-BATT module details

Field Replacement of Batteries

To access the batteries, remove the four retaining screws holding *the bottom plate* to the ModuLogger assembly. The battery connector can then be unplugged and the batteries be replaced by popping them out of the holders and reinstalling new batteries. Align the batteries with the *positive terminal toward the holder end marked with a red washer*. Reconnect the battery connector, adjust the position of the foam spacer and fasten the bottom plate back onto the ModuLogger assembly with the four side screws.

Note that the batteries can be accessed by removing any level of the 4 side access screws on the ML-BATT module, however it is typically easiest to remove the 4 on the metal bottom plate.

Alkaline D-cells are recommended for use in the ModuLogger as they contain significantly more energy than standard or `heavy-duty' cells and will provide substantially longer recording capability. Depending on the Program Net within the ModuLogger, a fresh set of alkaline D-cells can power the ModuLogger for up to 4 weeks of logging.

ML-DISP; DISPLAY AND USER INTERFACE MODULE

The ModuLogger can be equipped with the ML-DISP module (Figure 3... -7) to provide a 2 line liquid crystal display (LCD), front panel Status/Alarm indicating LEDs and a full complement of User buttons. With these features, system messages, status, and more can be accessed in the field without a serial connection to a PC.

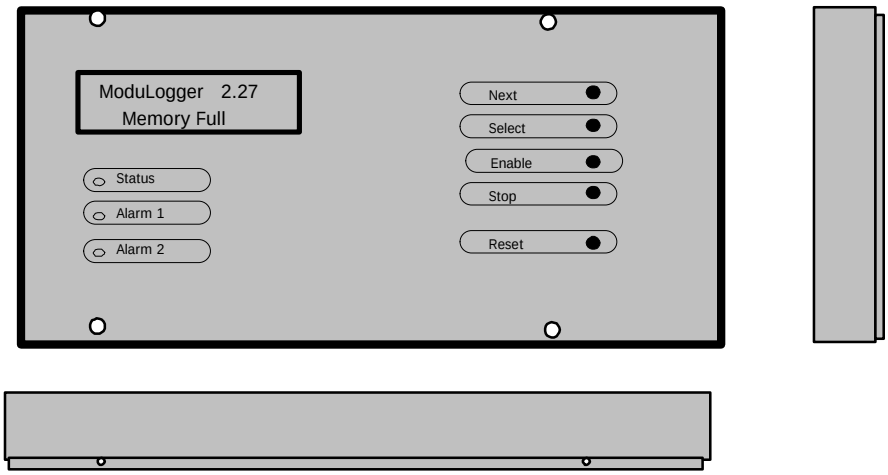

Figure 3... -7: ML-DISP Module

Module Installation:

Refer to the *Installation Section* earlier in this chapter for detailed installation instructions of the Interface Module onto the System Base. No special considerations are required for installation of this module.

I/O Module Layer Requirements / Limitations:

The ML-DISP module must be installed as the top layer in a ModuLogger system (obviously). The ML-DISP does not utilize any Module Address switches.

Hardware Input Signal Configuration Switches:

The ML-DISP does not utilize any configuration switches and is automatically detected.

Push Buttons

Located on the right side of the ML-DISP are five momentary push buttons providing basic ModuLogger operational control. These buttons provide the following features:

NEXT and SELECT

The NEXT and SELECT buttons are for User control of the liquid crystal display (LCD) information displays. Pressing NEXT will advance the LCD to the next menu item at the current menu level. Pressing the SELECT button selects that menu item and a new level of menus or results are displayed.

A detailed explanation of the operation of the NEXT and SELECT buttons is covered in a later section on the Display.

ENABLE Button:

The ENABLE button duplicates the functions of the ENABLE button located on the end of the MLCPU-1 module (discussed in prior section MLCPU-1 Module).

STOP Button:

The STOP button duplicates the functions of the STOP button located on the end of the MLCPU-1 module (discussed in prior section MLCPU-1 Module).

As discussed in that section, memory can be cleared by holding this button down for approximately 10 seconds. Memory can also be cleared through a menu sequence utilizing the NEXT and SELECT buttons on loggers equipped with the ML-DISP module. See Display section following.

RESET Button:

The RESET button duplicates the functions of the RESET button located on the end of the MLCPU-1 module (discussed in prior section MLCPU-1 Module).

3-Button System Initialization:

A complete initialization of the logger that will clear data memory and program memory can be performed using the ENABLE, STOP and RESET buttons. This sequence (discussed in prior section MLCPU-1 Module) can be performed using the buttons located on the ML-DISP module as well.

Display

An extended temperature range 2-line by 16 character liquid crystal display (LCD) is provided. Information ranging from Operational Mode to System Status to Alarm Messages to signal readings can all be displayed on the LCD. The LCD is continually ON. Information to be displayed is controlled by a User via the SELECT and NEXT front panel buttons.

Additionally, alarm messages will be automatically displayed on the LCD when User pre-programmed conditions are met. These messages and

conditions are defined by the User in the Program Net developed within HyperNet (Chapter 7) and loaded into ModuLogger memory.

Display Operation

Information that can be displayed on the LCD is arranged in a hierarchical format and is accessed by a User via the NEXT and the SELECT buttons on the front panel of the ModuLogger. The menu structure is diagrammed in Figure 3... -8.

Pressing the NEXT button advances the display to the next available item in that menu level. Repetitive presses of the NEXT button will result in a circular sequencing through all of the available menu items on the current level and eventual repeat of the sequence.

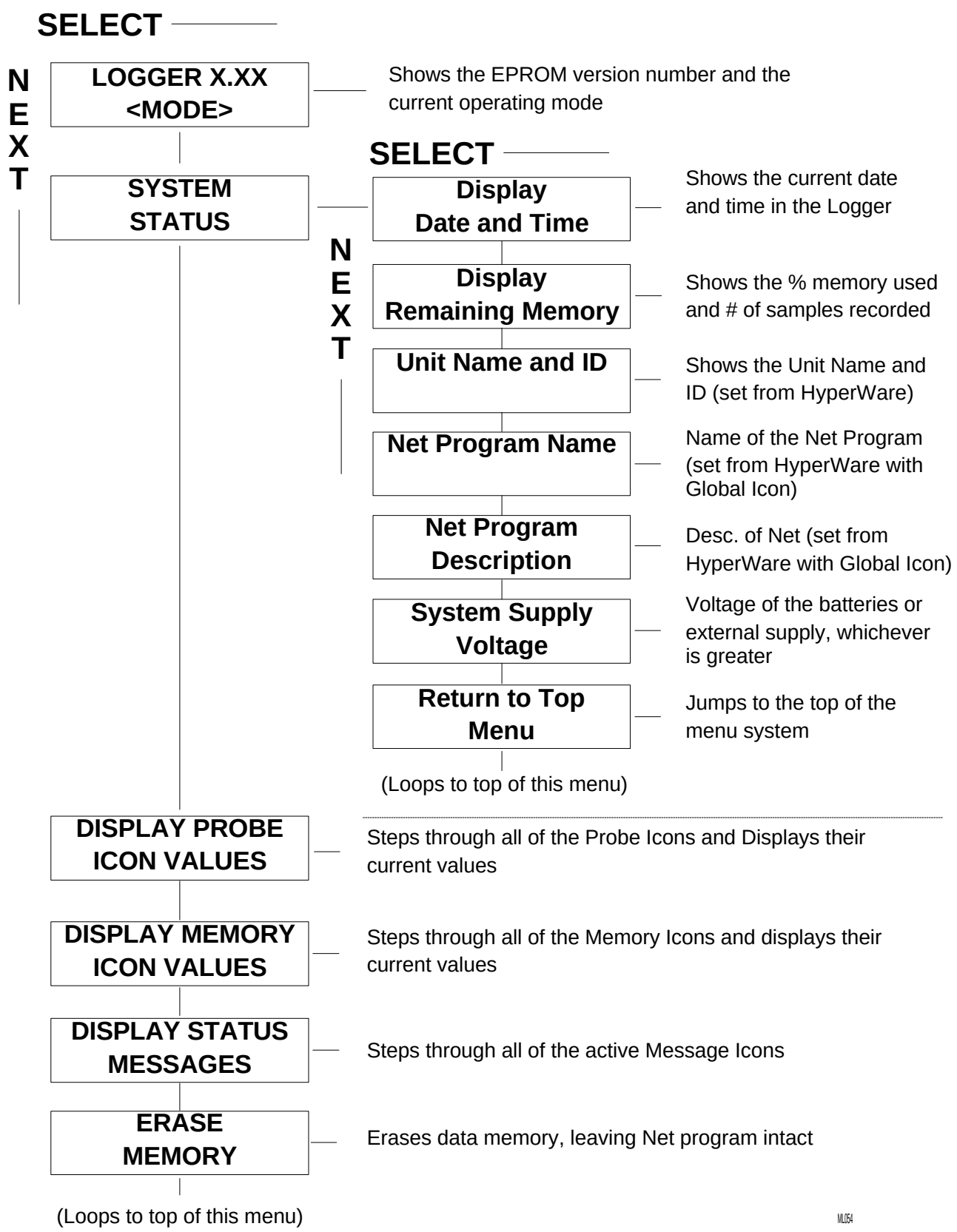

Figure 3... -8: LCD (display) Menu Structure

Pressing the SELECT button selects that menu item and a new level of menus or results are displayed. A detailed description of the various menu items and levels follow.

> ***TIP*** *- a good comprehension of this LCD menu structure can be achieved by close reading of this section... but better results may be achieved by just `diving in' and poking around with the NEXT and SELECT buttons to develop a feel for the structure. Then read through this section for the details.*

Display Menu Items

Following are descriptions of each of the display menu items identified in Figure 3... -8. Further details may be found in later sections detailing the functions described.

TOP MENU:

When the ModuLogger is powered ON, the Top Menu is displayed in the LCD. The Top Menu indicates the ModuLogger EPROM version on the top line of the LCD (software version residing in an EPROM memory chip within the ModuLogger) and on the bottom line, the current operational mode of the ModuLogger. Displayed Modes include:

ENABLED

Indicates the ModuLogger is currently executing a Program Net that has been developed with HyperNet and transferred to the ModuLogger memory.

STOPPED

The ModuLogger is not executing a Program Net. Since the Net is not executing and updating the net, stepping through various Probe Points will result in values and states that will not be current.

MEMFULL STOPPED

Data memory within the ModuLogger has filled and the execution of the Program Net has stopped. This message will also display if the Rotary Memory mode is utilized (See Global icon in Appendix A) and a logging session has been performed. In Rotary Memory mode, only one logging session can be maintained in the ModuLogger memory.

MEMFULL ENABLED

Memory within the ModuLogger has filled, however execution of the Program Net is continuing. This mode of operation may be User selected when alarming/control functions are to be monitored.... even after the ModuLogger memory has filled. This display will only occur if the User has selected the memory utilization option *Log to Full*

Memory and Continue Processing during setup of the Program Net within HyperNet (Global Icon option).

MEMFULL WRAPPING
Displays when the ModuLogger Program Net is configured in the Rotary Memory mode. When memory fills, the ModuLogger starts writing over the first collected data. Since the Program Net is still executing, alarms and control functions continue to be monitored. Rotary Memory mode is enabled during setup of the Program Net under the Global Icon.

RCV'ING NET
Displays momentarily during the actual serial upload of of a Program Net to the ModuLogger.

NO PROGRAM NET
Displays upon first power up of the ModuLogger after the Program Net has been lost. This should only occur after replacement (or initial installation) of the lithium cell used for Data Memory backup. The display indicates that a search for a valid Program Net stored within the ModuLogger memory has failed.

In the event that this message displays, check (and replace if low) the Lithium Cell via the STATUS menu described below. Then reprogram the ModuLogger with a new Program Net.

BAD PROGRAM NET
Displays if an illegal or corrupted Program Net is in memory. This message should only occur if memory containing the Program Net has been corrupted or the unit has undergone a 3-button Initialization which has cleared out the ModuLogger Program Net. In the event that this message displays, reprogram the logger with a new Program Net, then check (and replace if low) the Lithium Cell via the STATUS menu described below.

CARD ERROR: MISSING FILE
Displays upon power-up of the ModuLogger with an improperly prepared PCMCIA card inserted (MLIM-5 module). The card should be formatted and prepared for use within the ModuLogger as described in Chapter 6.

BAD CONFIG
Displays if User selectable switch settings on the MLAD-1 or any other ModuLogger Interface Modules do not match the currently loaded Program Net. The message also identifies which Interface Module and channel or incompatible. If this message displays, modify the Program Net to match the hardware or open the ModuLogger and examine the switch settings on the installed Interface Modules and correct the invalid setting(s).

SYSTEM STATUS

From the Top Menu, pressing the Next button once will advance the display to System Status. Pressing SELECT while System

Status is displayed results in a new level of display. Menu selections available on this level include:

DATE AND TIME
Press SELECT to display the current Date and Time in the ModuLogger Real Time Clock. This is the date and time to which collected data is referenced. The ModuLogger date and time are set from within HyperComm (Chapter 5).

REMAINING MEMORY
Press SELECT to display the number of samples recorded and the percentage of memory used.

> ***TIP:*** *Depending on the User defined format for data storage and the actual time and values being stored, samples will require varying amounts of memory for storage. For this reason, use caution when extrapolating the remaining logging time.*

UNIT NAME & ID
Press SELECT to display the programmed ModuLogger Name and ID. The ModuLogger Unit name and ID can be User assigned through HyperWare (Chapter 5). This ID can be used for corporate tracking of multiple units, calibration schedules, etc.

PROGRAM NET NAME
Press SELECT to display the currently loaded Program Net name. This name is assigned during the development of a Program Net (Chapter 7).

PROGRAM NET DESCRIPTION
Press SELECT to display a previously programmed description of the Program Net (above).

SYSTEM SUPPLY VOLTAGE
Press SELECT to display the ModuLogger supply voltage and the approximate state of charge of the memory / clock backup lithium cell. If internal batteries are installed in the ModuLogger and an external power supply is also connected, the displayed *Supply Voltage* indicated refers to the greater of the two.

> ***FYI****: The displayed Supply Voltage is measured at an internal node on the power supply circuitry. Displayed battery voltage is the voltage of the internal batteries . External supply voltage will be approximately 2 volts higher than indicated. If the Input Range Jumper (see MLCPU-1 section) is set to HI, the External supply voltage will be approximately 3.5 volts higher than indicated.*

The state of charge display for the lithium cell (used for memory and clock backup) will display *GOOD* or *LOW*. If

LOW is displayed, download any desired data memory, then replace the lithium cell per the instructions in Appendix D.

RETURN TO TOP MENU

Press SELECT to return to the Top Menu display. Press NEXT to cycle through this level's menu selections again.

DISPLAY PROBE ICON VALUES

During the construction of a Program Net within HyperNet, the User can opt to connect Probe Point icons to various nodes throughout the net. These Probe Point icons allow the User to view the current values on the nodes to which they are connected. (Program Net development is described in Chapter 7 and details on the Probe Point icon are included in Appendix A.) One of the ways that the Probe Point values can be viewed is via the ModuLogger front panel LCD, as follows:

> ***FYI:*** *Probe Point is used for the icon name as connecting these icons to a node on a Net is somewhat analogous to putting a test meter probe on the Net nodes and reading a value.*

From the Top Menu, pressing the NEXT button twice will advance the LCD to *Display Probe Icon Values*. Pressing SELECT while *Display Probe icon Values* is on the LCD will shift the display to a level containing the actual Probe Point values. The top line of this display is the Probe icon Name assigned to the icon during construction of the net and the second line is the value and units.

Repetitively pressing NEXT will step the display through all of the Probe icons previously programmed into the Program Net. To return to the Top Menu, press SELECT when *Return to Top Menu* is displayed.

Displayed Probe icon values will be updated whenever the net node is updated. If the ModuLogger is Stopped (ie not executing the net), the last calculated node value will be displayed.

> ***TIP:*** *Displaying Probe icon Values while the ModuLogger is enabled will slow down the execution of the net. For higher speed data logging applications (eg sub-second sampling rates), faster performance can be achieved by leaving the LCD in a mode where it is not displaying the time/date, battery state of charge, remaining memory, Probe icons, Memory Icons , or Net Values,*

DISPLAY MEMORY ICON VALUES

In addition to display of Probe icon values (previously described), the last value stored to any Memory icon within the executing Program Net can also be displayed on the LCD.

From the Top Menu, pressing the NEXT button three times will advance the LCD to *Display Memory Icon Values*. Pressing SELECT while *Display Memory Icon Values* is on the LCD will shift the display to a level containing the actual last logged values. The top line of this display is the Memory Icon Name

assigned to the icon during construction of the net and the second line is the last logged value and units.

To return to the Top Menu, press SELECT when the *Return to Top Menu* message is displayed.

DISPLAY STATUS MESSAGES

Messages can be sent to the LCD due to ModuLogger operational conditions or User programmed Program Net conditions. To view the active messages; from the Top Menu, press NEXT five times and then SELECT while the *Display Status Messages* menu is displayed. Step through the messages with the NEXT button and return to the Top Menu by pressing SELECT when *Return to Top Menu* is displayed.

Depending on the inputs and programmed conditions within the currently executing Program Net, User programmed messages may come and go as the conditions for display are met then not met over time.

During execution of a Program Net, if the conditions (either ModuLogger operational or User defined Program Net) are met for a message display (eg an alarm conditon occurs), the message will display on the LCD immediately... overwriting any current displays. Messages displayed on the LCD will not be cleared *from the LCD* when they become False, however they will be cleared from the internal display queue. Messages will only be cleared from the LCD if another message is displayed or if the User changes the LCD (via the Select/Next buttons) in any way. For additional information on message display capability from within a Program Net,, refer to the Message icon in Appendix A.

ERASE MEMORY (VIA DISPLAY SEQUENCE)

Data memory within the ModuLogger and within an inserted PCMCIA card can be cleared via the SELECT and NEXT buttons. To clear memory, from the Top Menu, press NEXT six times until the message *Erase Memory* appears on the LCD. Then press SELECT a total of five times to clear the memory. Successful erasure of the memory is confirmed with a *Memory has been Erased* message.

Note that at any time during this sequence of SELECT button presses, pressing the NEXT button will abort the Memory Clear sequence and stored data will be preserved.

Internal ModuLogger memory and PCMCIA card memory can also be cleared via a serial communication link. Refer to the Chapter 5 on HyperComm for details. Additionally, memory can be cleared using the STOP button (see details in the STOP button explanation in the MLCPU-1 section)

Status Lights

The Status lights on the ML-DISP duplicate the lights located on the end of the MLCPU-1 module (discussed in prior section MLCPU-1 Module).

Three light emitting diode (LED) lights are provided on the front panel, labeled STATUS, ALARM 1 and ALARM 2. The STATUS LED is merely a

visual indicator provided for User specified application from within a Program Net. The ALARM LED's provide visual indication of the state of the two output relays contained on the MLCPU-1 module. When the ALARM LED is ON, the relay contacts are closed.

MLIM-1; FOUR CHANNEL ANALOG INTERFACE MODULE

Overview:

The MLIM-1 is a four channel add-on Interface Module for use in conjunction with the ModuLogger System Base.

> ***NOTE:*** *The MLAD-1 module of the System Base includes the functionality of the MLIM-1 in additon to its other functions. This section's configuration and operation instructions pertain to both the MLIM-1 add-on module and the MLAD-1 component of the System Base.*

Each of the four channels can be individually programmed for any combination of the following signal types and input ranges with HyperWare software (via HyperNet) and hardware Configuration Switches (located on the Interface Module).

Thermocouple:

Type	Color (USA)	Range (F)	Range (C)
J	white/red	-60 to 1400F	-50 to 760C
K	yellow/red	32 to 2500F	0 to 1370C
E	purple/red	-150 to 1830F	-100 to 1000C
T	blue/red	-250 to 750F	-160 to 400C
R	black/red	32 to 1830F	0 to 1000C
S	black/red	32 to 3182F	0 to 1750C

Table 3... -1: Thermocouple input types and ranges

DC Voltage:

Full Scale (FS) ranges:

Icon	Full Scale Input Ranges				
VDC-LO	+/- 20mV	+/-40mV	+/-50mV	+/-60mV	+/-100mV
	+/-200mV	+/-1V	+/-2V		
VDC-MED	+/-5 V	+/- 10V			
VDC-HI	+/- 3V	+/-15V	+/-30V		

Table 3... -2: DC Voltage input ranges

Input Impedance for the 5V, 10V, and 30V ranges is >2.5Megohm. All other range's input impedance is > 10 Megohm.

DC Current:

Full Scale (FS) ranges:

Icon	Full Scale Input Ranges			
mA-LO	+/-200uA	+/-400uA	+/-500uA	+/-1.0mA
	+/-2.0mA	+/-11 mA	+/-22mA	

Table 3... -3: DC Current input ranges

Input resistance for all current ranges is a 100 ohm precision shunt.

Module Installation:

Refer to the *Installation Section* earlier in this chapter for detailed installation instructions of the Interface Module onto the System Base.

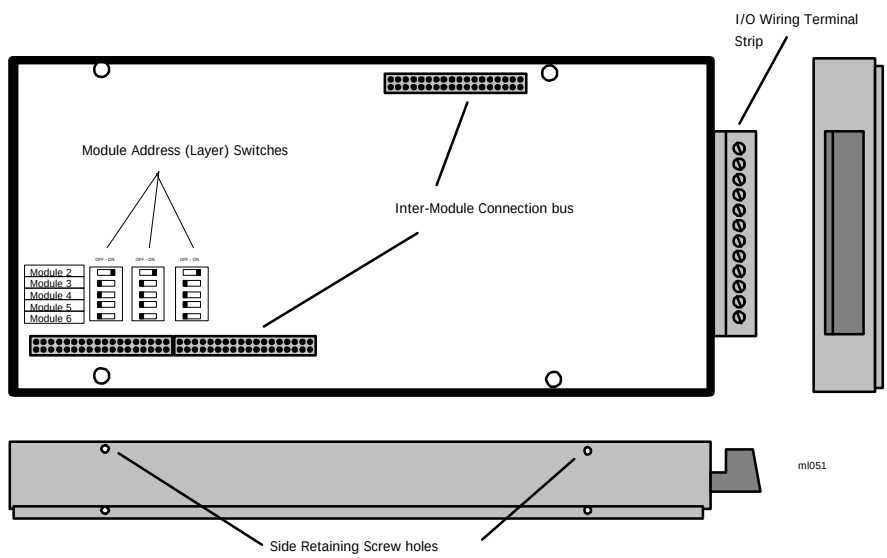

Figure 3... -9: MLIM-1 Module Address Switches

I/O Module Layer Requirements / Limitations:

The MLIM-1 module can be installed in any of the five I/O Module positions (Figure 3... -4). The module layer address must be set on the module to correspond to the layer position into which the module is installed.

This address is programmed into the module through the use of the three Module Address Switch banks (Figure 3... -9). Each switch bank contains 5 switches. Note the marking <u>on the circuit board</u> identifying address rows for Module Layers 2 through 5. Set one switch in each of the 3 banks ON corresponding to a module layer determined above. Each switch bank should have only ONE switch ON and the other four switches OFF.

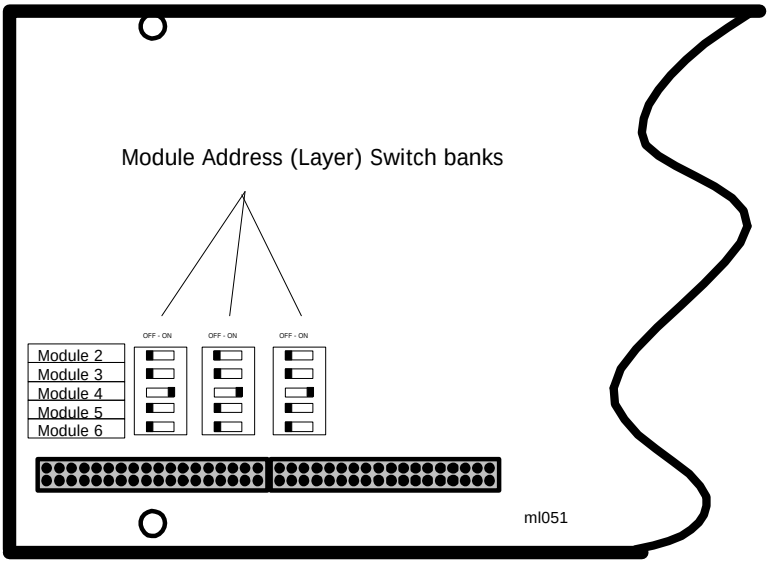

Figure 3... -10: Example Address setting for Module Layer Position 4

CAUTION: The switch banks may have different numbering than the circuit board... *insure that the marking on the circuit board is followed*... not the marking on the switch banks.

NOTE: The MLAD-1 module does not have Module Address Switches as the MLAD-1 is always in Module Address Layer Position 1.

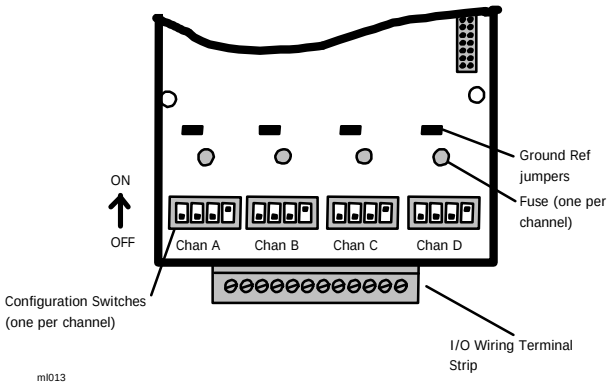

Figure 3... -11: Channel configuration switches within the MLIM-1 Module

Hardware Input Signal Configuration Switches:

Four sets of Input Configuration Switches are provided for each of the four channels (Figure 3... -11). Through the use of these switches, various types of signals can be directly fed into the ModuLogger eliminating the need for User supplied external precision dividers, shunts and other circuitry.

Although for most applications, an in-depth understanding of the function of these switches is not required, a simplified schematic of the input section of the MLIM-1 is provided in Figure 3... -12. As can be seen in this schematic, different combinations of the switches interject voltage dividers and shunts into the input stage of the Interface Module.

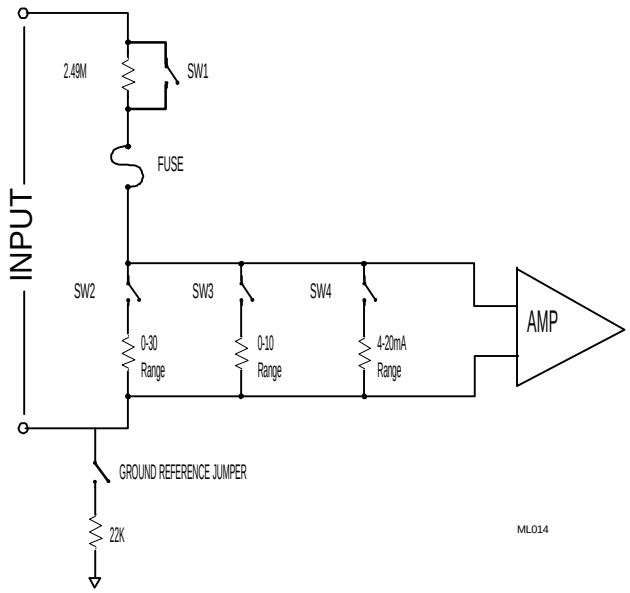

Figure 3... -12: Simplified schematic of input section of MLIM-1 and MLAD-1 Modules

The following reference chart provides the necessary information for configuration of the input switches. The switch settings are read by the ModuLogger during a query of the hardware configuration (from within HyperNet) so the User is not burdened with keeping notes of the current Module configuration. Improper setting of the switches will result in a `Bad Configuration' message on the LCD upon power-up of the ModuLogger. In the event that this message displays, check the switch settings per Table 3... -4 and correct the conflict.

Input / Range	SW 1	SW2	SW3	SW4
Thermocouples VDC up through +/-2 VDC	OFF	OFF	OFF	**ON**
VDC up through +/-10 VDC	OFF	OFF	**ON**	OFF
VDC up through +/-30 VDC	OFF	**ON**	OFF	OFF
All Current (mADC) Ranges	**ON**	OFF	OFF	**ON**

Table 3... -4: MLIM-1 configuration switch settings

MLIM-1 Channel Configuration via Software:

When a MLIM-1 channel is configured as a particular type of input via the module configuration switches, the configuration will be automatically detected during the development of a Program Net for the ModuLogger. Software input range configuration and utilization of the MLIM-1's channels in a Program Net is covered in Chapter 7 and within the Master Icon Listing in Appendix A.

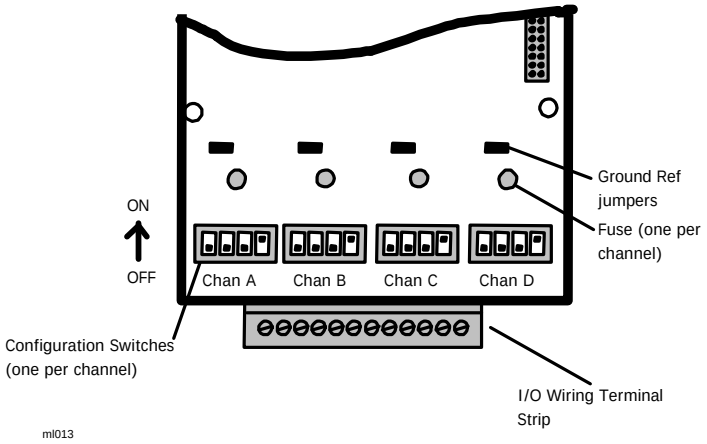

Figure 3... -13: Channel configuration switches within the MLIM-1 and MLAD-1 Modules

Input Overcurrent Fuses:

Each channel is protected by a 125mA fuse as shown in Figure 3... -12 (circuit) and Figure 3... -13 (physical location on module). This fuse will protect the module from overcurrent surges received from malfunctioning or improperly connected sensors and transmitters.

In the event that a channel on a module quits responding with proper values, it may be an indication that this protective fuse has blown. The fuse can be removed from the circuit and checked for continuity with an ohm-meter and/or replaced with a Littelfuse P/N: 273.125 fuse available from Logic Beach Incorporated or many electronic distributors.

Commonly, this fuse is blown during installation of 4-20mA current channels where the power supply powering the 4-20mA transmitter is accidently shorted directly across the logger input channel. To avoid this inconvenience, always check wiring prior to powering up system power supplies.

MLIM-1; THERMOCOUPLE APPLICATION

Thermocouple Connection:

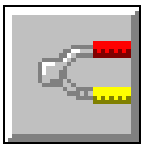

Thermo-couple Icon

To utilize an MLIM-1 channel as a thermocouple input, configure that channel's Interface Module Configuration Switch per Table 3... -4. Channels configured as thermocouple inputs utilize three terminal strip connections per input; Positive lead, Negative lead, and Shield.

Connect the thermocouple positive and negative (red in USA) leads to the correct pair of terminals on the module terminal strip. Refer to Chapter 7 for steps to generate a Terminal Strip Wiring printout for use in making field wiring connections.

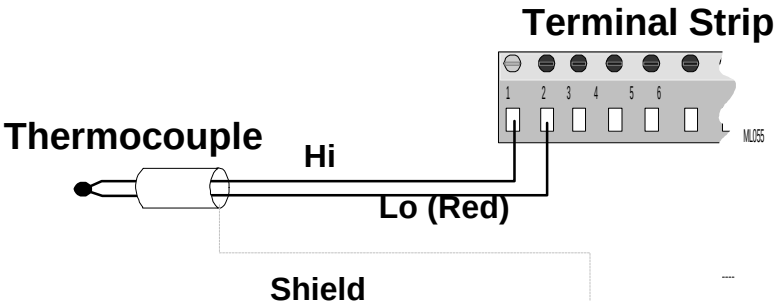

Figure 3... -14: Thermocouple (and optional Shield) terminal strip connection

Polarity is critical.

Shielded thermocouple wire is recommended in electrically noisy environments for optimum signal protection. If shielded wire is used, a ground wire should be run from the MLAD-1 module Chassis Ground (terminal strip connection #16) to an earth ground connection to conduct away noise picked up by the thermocouple shield (Figure 2-8). Only one ground wire is required as all of the Shield terminal strip connections are interconnected within the logger and routed to the MLAD-1 Chassis Ground terminal.

NOTE: Do not ground the shield wire at the sensor end away from the ModuLogger.

Thermocouple Application Notes:

Cold Junction Compensation (CJC): For thermocouple measurements, the temperature of the terminal strip connections is required in the voltage to temperature conversion equation used by the ModuLogger. This temperature is measured by the CJC sensor located in the MLAD-1 module. Any differential temperature from the metal terminal strip connections to the CJC sensor on the MLAD-1 circuit board will result in direct measurement errors.

The MLAD-1 is thermally designed to provide good CJC sensor vs terminal strip temperature tracking however, to minimize this potential error, avoid installations or effects that will induce extreme temperature differential. The most accurate readings will be achieved when the ModuLogger has been allowed to temperature stabilize. In rapidly changing temperature environments, additional accuracy can be achieved if the ModuLogger is housed within another enclosure providing better temperature equalization throughout the system.

DIFFERENTIAL POTENTIAL: to minimize current loop induced errors, use isolated type thermocouples (ie thermocouples that are not in electrical contact with a conductive surface to which they are attached) or insure that all thermocouple junctions are at ground potential. Insure that input voltages do not exceed 3.0V above or below circuit ground (maximum common mode voltage).

MLIM-1; DC VOLTAGE APPLICATION

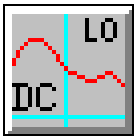

VDC- Lo Range Icon

The MLIM-1 can support three different major ranges (and a multitude of sub-ranges) of analog DC voltage input depending on the channel's hardware Configuration Switch setting (See Table 3... -4). To utilize an MLIM-1 channel as a DC Voltage input, set that channel's Configuration Switch per the Table for the desired input signal range.

As shown in Figure 3... -12, when DC-MED or DC-HI are selected with the hardware Configuration Switches, front-end divider circuitry is enabled. This circuitry attenuates the input signal to a range that can be handled by the MLIM-1 instrumentation amplifier section.

> ***TIP**: For best accuracy and absolute resolution, utilize the lowest range possible that will cover the input signal's dynamic range without over-ranging.*

Signal Connection (all Ranges):

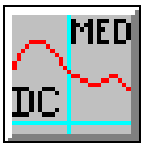

VDC- Medium Range Icon

Interface Module channels configured as VDC inputs provide three terminal strip connections per input; Positive lead, Negative lead, and Shield.

Connect the VDC signal positive and negative leads to the correct pair of terminals on the module terminal strip (Figure 3... -15). Refer to Chapter 7 for steps to generate a Terminal Strip Wiring printout for use in making field wiring connections.

Observe polarity or the output signal will be reversed.

To minimize noise pickup on sensor wiring between the ModuLogger and the end sensor or signal source, 18 to 22 AWG shielded, twisted pair wire is recommended.

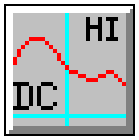

VDC-High Range Icon

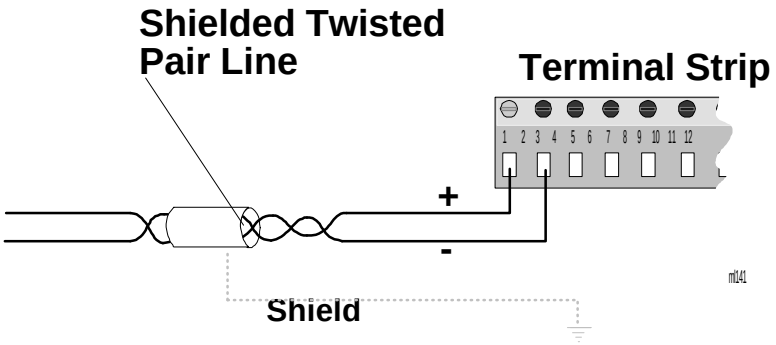

Figure 3... -15: VDC signal (and optional shield) terminal strip connection

> ***FYI:*** *Shielded wire minimizes the amount of noise picked up by the internal conductors carrying the signals by providing an `electrical shell' or Faraday cage around the internal conductors.*
>
> *Twisted pair wiring exposes both conductors equally to the ambient electrical noise. This common-mode type noise is easier to reject by the Interface Modules input signal conditioning circuitry than un-balanced (or differential) noise.*

Shielding and/or twisted pair wire is especially recommended in electrically noisy environments for optimum signal protection. If shielded wire is used, a ground wire should be run from the MLAD-1 module Chassis Ground (terminal strip connection #16) to an earth ground connection to conduct away noise picked up by the thermocouple shield (Figure 2-8). Only one ground wire is required as all of the Shield terminal strip connections are interconnected within the logger and routed to the MLAD-1 Chassis Ground terminal.

NOTE: Do not ground the signal wiring shield conductor at the sensor end (the end away from the ModuLogger) as this can induce additional noise into the sensor wiring..

APPLICATION NOTES; DC Voltage Channels

Channel Isolation:

The negative terminal of MLIM-1 channels configured as DC Voltage inputs are isolated from the ModuLogger circuit ground by a 22Kohm resistor (see Figure 3... -12).

Common Mode Input Range Considerations:

To prevent saturation of the input amplifier stages and erroneous readings, no voltages should be applied to any input terminals that are greater than 4.0V above or below circuit ground. If the signal being measured is not connected to the ModuLogger circuit ground (ie `isolated' supplies are used), common mode input voltages up to 32 V can be accepted. Voltages above this level can be lethal and should not be applied to the ModuLogger. Supply isolation can be achieved by allowing the ModuLogger to run from its internal batteries (rather than an external source).

Multiple Measurement Nodes on a Circuit:

When measuring different voltage points from a common circuit with multiple channels (of one or more Interface Modules), measurement errors from induced ground currents can exist. Single ended measurements may be required. Consult the factory for application assistance.

MLIM-1; DC CURRENT (MA-LO) APPLICATION

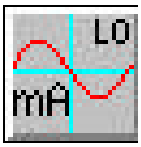

mA-Lo Icon

The MLIM-1 can accept DC Current within the ranges specified in Table 3... -3. To utilize an MLIM-1 channel as a DC Current input, set that channel's Configuration Switch per Table 3... -4 as a **mA-LO** Channel.

As shown in Figure 3... -12, when mA-DC is selected with the hardware Configuration Switches, a precision 100 ohm burden resistor is enabled. The input signal is measured as a voltage across the shunt resistor.

> ***TIP**: For best accuracy and absolute resolution, utilize the lowest range possible that will cover the input signal's dynamic range without over-ranging.*

Signal Connection (all Current Ranges):

Interface Module channels configured as mA-LO inputs provide three terminal strip connections per input; Positive lead, Negative lead, and Shield.

Connect the mADC signal positive and negative leads to the correct pair of terminals on the module terminal strip (Figure 3... -16).

Refer to Chapter 7; HyperNet Programming for steps to generate a Terminal Strip Wiring printout for use in making field wiring connections.

Observe polarity or the output signal will be reversed.

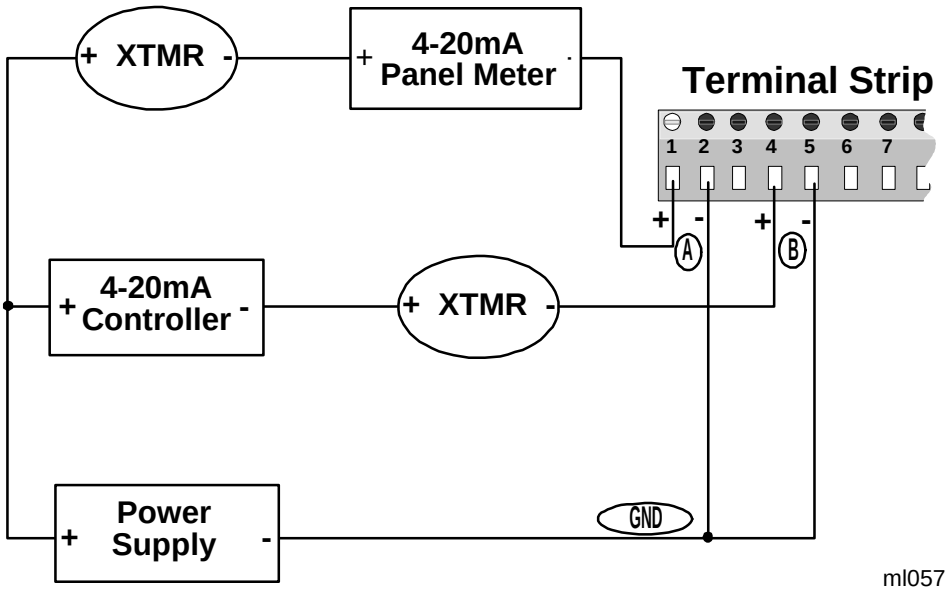

Figure 3... -16: Terminal strip connections for multiple 4-20mA inputs

To minimize noise pickup on sensor wiring between the ModuLogger and the end sensor or signal source, 18 to 22 AWG shielded, twisted pair wire is recommended. At the low current levels input to the MLIM-1, voltage drop in signal wiring is not a concern, however for extremely long runs, a voltage drop analysis should be performed for the entire loop and if necessary larger gauge wire should be used.

> ***FYI:*** *Typically, with current signals (in contrast to low level voltage signals), noise pickup will be less due to the low impedances involved in the circuit. However, in real-world applications, one should attempt to minimize noise on signal wires whenever possible... remember, Mother Nature loves to throw surprise parties.*
>
> *Shielded wire minimizes the amount of noise picked up by the internal conductors carrying the signals by providing an `electrical shell' or Faraday cage around the internal conductors.*
>
> *Twisted pair wiring exposes both conductors equally to the ambient electrical noise. This common-mode type noise is easier to reject by the Interface Modules input signal conditioning circuitry than un-balanced (or differential) noise.*

Shielding and/or twisted pair wire is especially recommended in electrically noisy environments for optimum signal protection. If shielded wire is used, a ground wire should be run from the MLAD-1 module Chassis Ground (terminal strip connection #16) to an earth ground connection to conduct away noise picked up by the wiring shield (Figure 2-8). Only one ground wire is required as all of the Shield terminal strip connections are

interconnected within the logger and routed to the MLAD-1 Chassis Ground terminal.

NOTE: Do not ground the signal wiring shield conductor at the sensor end (the end away from the ModuLogger) as this can induce additional noise into the sensor wiring..

APPLICATION NOTES; DC Current Channels

Channel Isolation:

The negative terminal of MLIM-1 channels configured as DC Current inputs are isolated from the ModuLogger circuit ground by a 22Kohm resistor (see Figure 3... -12).

Common Mode Input Range Considerations:

To prevent saturation of the input amplifier stages and erroneous readings, no voltages should be applied to any input terminals that are greater than 4.0V above or below ModuLogger circuit ground.

In wiring multiple 4-20mA transmitters to the ModuLogger through an MLIM-1 channel, this 4.0V common mode level must not be exceeded. Figure 3... -16 shows an acceptable method to connect multiple transmitters running from a common power supply to several channels on an MLIM-1 Interface Module channel without exceeding this spec.

A simple method to comply with this spec is to insure that all negative inputs (-) on channels configured as mA-LO inputs are directly connected to the GROUND (-) terminal of the power supply used for excitation of the 4 to 20 mA loop (eg the Logic Beach RPS-1, Rechargeable Power Supply). This will insure that the voltage developed across the 100 ohm resistor internal to the MLIM-1 mA-LO input channel will never exceed 2 VDC (ie 20mA X 100 ohms = 2 VDC) relative to any channel's (-) negative terminal. In Figure 3... -16, the voltage developed between node [A] to [GND] and node [B] to [GND] will never exceed 2VDC (in normal operation).

Multiple Measurement Nodes on a Circuit:

When measuring different voltage points from a common circuit with multiple channels (of one or more Interface Modules), measurement errors from induced ground currents can exist. Single ended measurements may be required. Consult the factory for application assistance.

Input Overcurrent Fuses:

Each channel is protected by a 125mA fuse as shown in Figure 3... -12 (circuit) and Figure 3... -13 (physical location on module). This fuse will protect the module from overcurrent surges received from malfunctioning or improperly connected sensors and transmitters.

In the event that a channel on a module quits responding with proper values, it may be an indication that this protective fuse has blown. The fuse can be

removed from the circuit and checked for continuity with an ohm-meter and/or replaced with a Littelfuse P/N: 273.050 fuse available from Logic Beach Incorporated or many electronic distributors.

MLIM-2; DIGITAL INTERFACE MODULE OVERVIEW

Overview:

The MLIM-2 Interface Module provides four input channels and four output channels on a single module. Each of the four input channels can be individually programmed for any combination of Event input, Count input, or Frequency input. The four output channels provide current limited nominal 5VDC output. Configuration of the module is done from within HyperNet in HyperWare.

Module Installation:

Refer to the *Installation Section* earlier in this chapter for detailed installation instructions of the Interface Module onto the System Base.

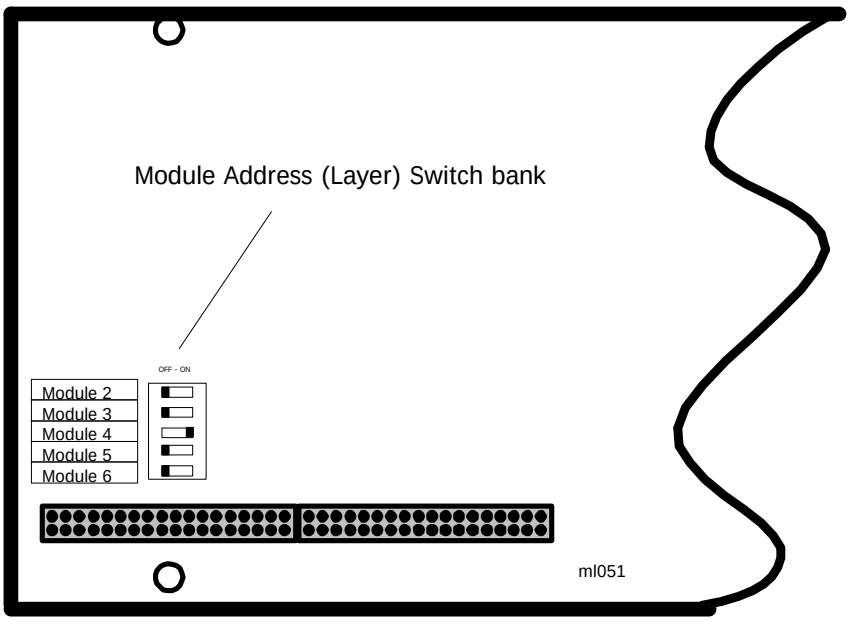

Figure 3... -17: MLIM-2 Module Address Switch Bank

I/O Module Layer Requirements / Limitations:

The MLIM-2 module can be installed in any of the five I/O Module positions (Figure 3... -4). The module layer address must be set on the module to correspond to the layer position into which the module is installed.

This address is programmed into the module through the use of the Module Address Switch bank (Figure 3... -17). The switch bank contains 5 switches. Note the marking on the circuit board identifying address rows for Module Layers 2 through 5. Set one switch in the bank ON corresponding to a

module layer determined above. The switch bank should have only ONE switch ON and the other four switches OFF.

CAUTION: The switch bank may have different numbering than the circuit board... *insure that the marking on the circuit board is followed*... not the marking on the switch banks.

Hardware Input Configuration Switches:

No hardware input configuration switches are provided on the MLIM-2. All configuration is done via the HyperNet software (with the exception of the Module Address setting discussed above).

Software Configuration of the MLIM-2:

The MLIM-2 module is completely configured on a channel by channel basis from within the HyperNet software. This software configuration and utilization of the various MLIM-2 channels in a Program Net is covered in Chapter 7 and within the Master Icon Listing in Appendix A.

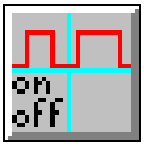

Figure 3... -18: Event icon (MLIM-2)

MLIM-2; EVENT INPUT APPLICATION

The Event function of the MLIM-2 allows for the recording of the state of an ON/OFF type input. Configured as an Event input, a channel will accept a powered input signal (ranging from 0 to a maximum of 15VDC) or a contact closure (dry contact) input.

- For powered input signals, the MLIM-2 Event function defines signals less than 1VDC as a Low level and greater than 4VDC (15VDC max) as a High level.
- For contact closure type inputs, power is automatically supplied from the MLIM-2 channel circuitry via a 100Kohm pull-up resistor (R1 in
- Figure 3... -22).

Channel input impedance is greater than 30K ohm.

A 40mS debounce circuit can be enabled via software which can be used to filter out `contact bounce' (Refer to the Master Icon Listing in Appendix A for details).

Figure 3... -19: Counter icon (MLIM-2)

MLIM-2; COUNTER INPUT APPLICATION

The Counter function of the MLIM-2 provides an accumulating total of signal transitions received at its input.

Configured as a Counter type input, a channel will accept a powered input signal ranging from 0 to a maximum of 15VDC or a contact closure (dry contact) input.

- For powered input signals, the MLIM-2 Counter function defines signals less than 1VDC as a Low level and greater than 4VDC (15VDC max) as a High level.
- For contact closure type inputs, power is automatically supplied from the MLIM-2 channel circuitry.

In Counter mode, 16,777,216 transitions can be received before the counter will roll-over to 0 and begin counting up again. This may be a consideration during the

implementation of a Counter channel within a Program Net and is covered in the Master Icon Listing, Appendix A.

Channel input impedance is greater than 30K ohm.

A 40mS debounce circuit can be enabled via software which can be used to filter out `contact bounce' (see below).

Event / Counter Input Signal Connections:

To utilize an MLIM-2 channel as an Event or Counter input, connect the input signal positive lead to an *Input* terminal (Chan A, B, C, or D) and the negative lead to one of the four *Common* terminals on the module terminal strip (Figure 3... -20). Note that all of the four Common terminals are interconnected and connect directly to the ModuLogger circuit ground. Refer to Chapter 7 for steps to generate a Terminal Strip Wiring printout for use in making field wiring connections.

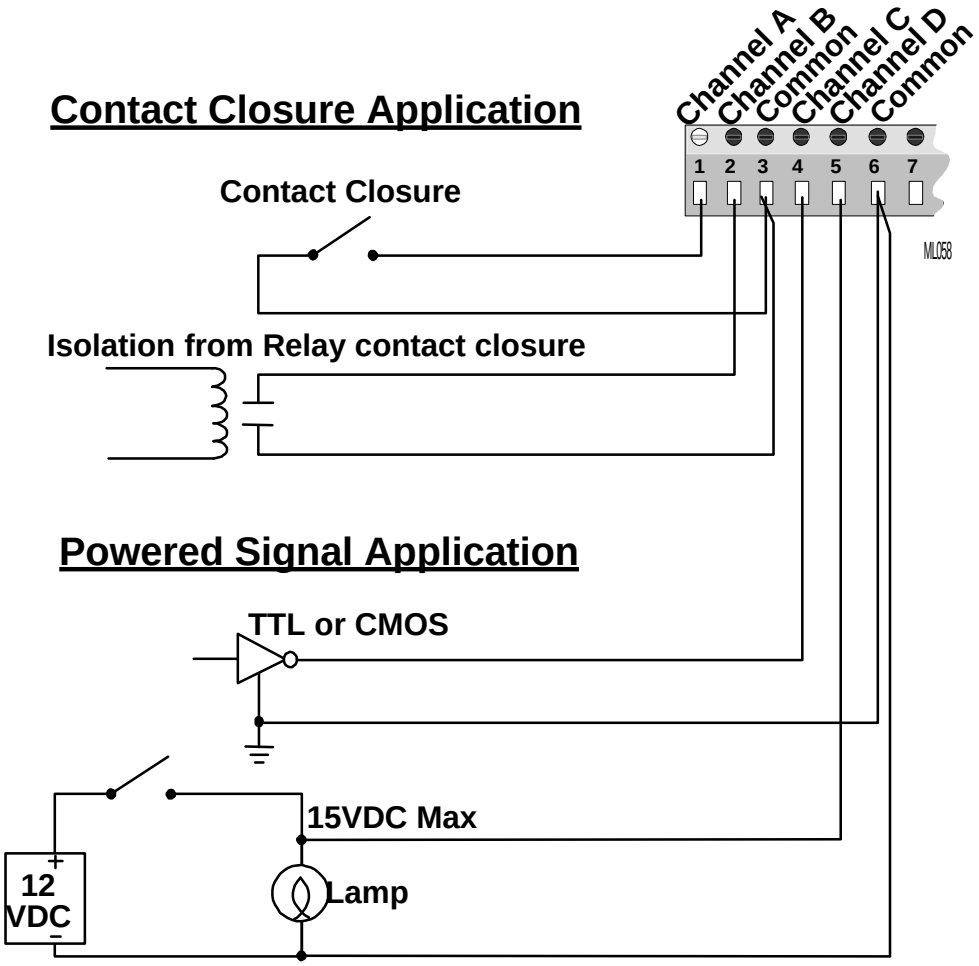

Figure 3... -20: Contact closure and Powered type Event or Counter signal input connections

> ***CAUTION:*** *Note that a direct connection exists between the common (-) terminal on all four channels of the MLIM-2 (*
>
> *Figure 3... -22). When connecting to multiple event or counter signal sources sharing a common ground or reference, insure that the source's ground or reference is connected to the terminal strip `common' terminal to prevent shorting out of the source signal and possible damage to the MLIM-2.*

For most counter and event applications, shielding is not necessary due to the relatively low input impedance of the channel and the high noise immunity of the MLIM-2 channel input.

-

MLIM-2; FREQUENCY INPUT APPLICATION

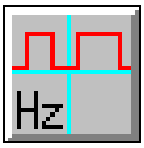

Figure 3... -21: Frequency icon (MLIM-2)

An MLIM-2 channel configured as a Frequency type input can measure input frequencies ranging from 5Hz to in excess of 20KHz. The channel will accurately measure frequencies of sine, square, or sine approximating input waveforms with peak to peak amplitudes of 300mVDC to 15VDC. Channel input impedance is greater than 30K ohm within the specified input range.

The MLIM-2 incorporates an AC coupled front-end amplifier for use with low amplitude signals (see AMP inFigure 3... -22).

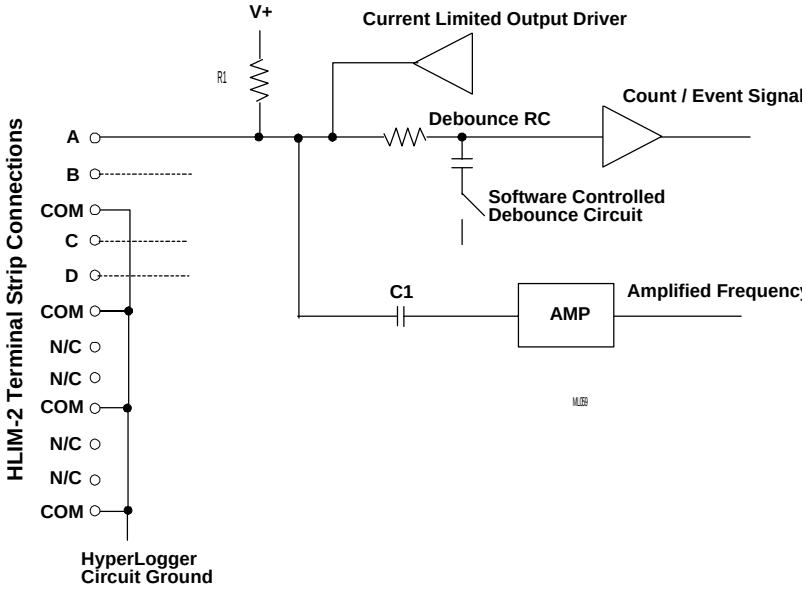

Figure 3... -22: Simplified schematic of MLIM-2 input channel (single channel shown)

Frequency Signal Connection:

To utilize an MLIM-2 channel as a Frequency input, connect the input signal positive lead to one of the four *Input* terminals (Chan A, B, C, or D) and the negative lead to one of the four *Common* terminals on the module terminal strip (Figure 3... -23). Note that all of the four Common terminals are interconnected and connect directly to the ModuLogger circuit ground.. Refer to Chapter 7 for steps to generate a Terminal Strip Wiring printout for use in making field wiring connections.

> ***CAUTION:*** *Note that a direct connection exists between the common (-) terminal on all four channels of the MLIM-2 (*
>
> *Figure 3... -22). When connecting to multiple frequency sources sharing a common ground or reference, insure that the source's ground or reference is connected to the terminal strip `common' terminal to prevent shorting out of the frequency signal and possible damage to the MLIM-2.*

For Frequency recording applications with small signal amplitude, high frequencies, long lead length and/or in noisy environments, twisted pair wire will provide extra noise immunity. In extremely noisy applications, shielded wire may be required. If shielded wire is used, the shield at the ModuLogger end should be connected to an external earth ground (Figure 3... -23) or if available, a grounded Shield connection provided on another type installed interface module (such as the MLIM-1).

NOTE: Do not ground the shield wire at the end away from the ModuLogger.

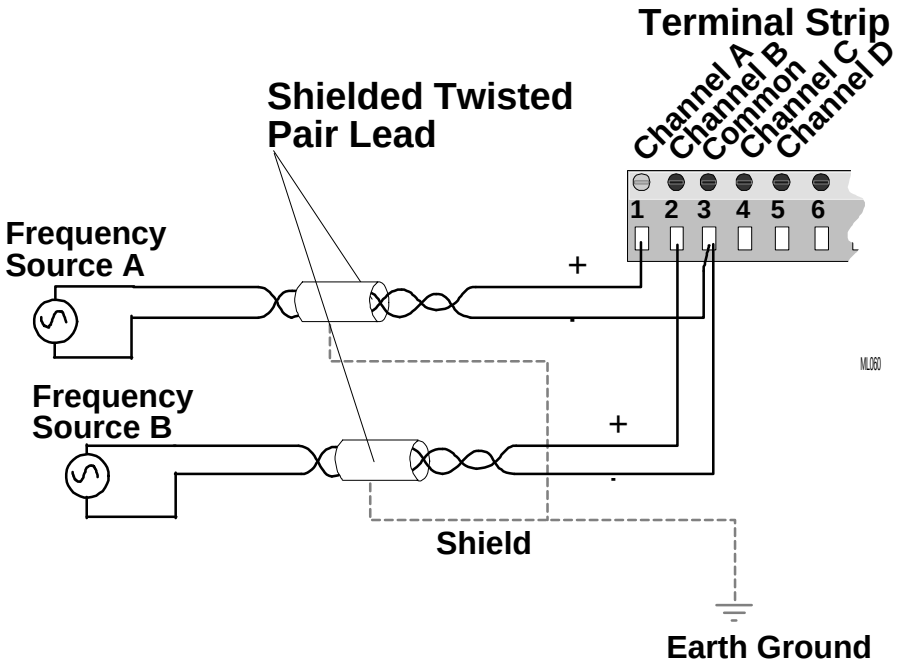

Figure 3... -23: Frequency input terminal strip connections (two inputs shown)

-

MLIM-2; DIGITAL OUTPUT APPLICATION

Digital Output icon (MLIM-2)

The MLIM-2 provides four channels dedicated as outputs. These channels can be configured for functions such as alarming. The output is a current limited voltage signal with the voltage/current characteristics shown in Figure 3... -24. As shown, with a light load, the output voltage maintains approximately 4+ VDC but as the

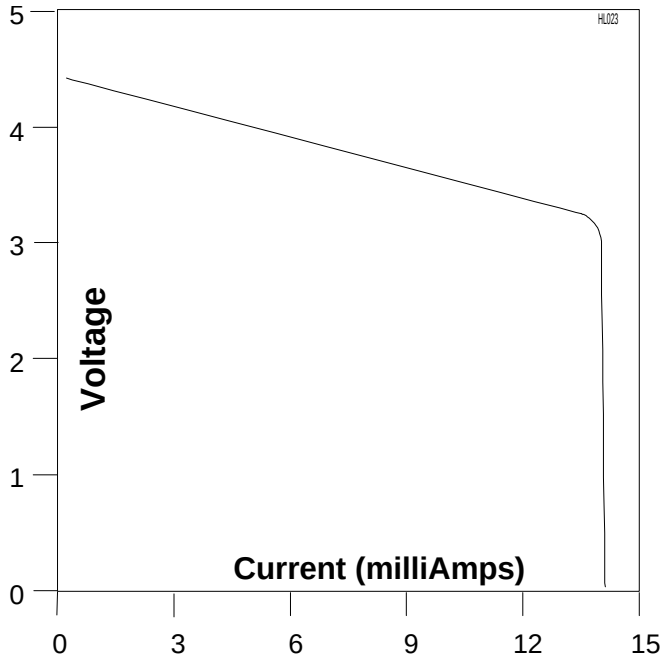

Figure 3... -24: MLIM-2 Digital output drive characteristics

current draw increases, current limiting occurs and the output voltage droops. The output can be short circuited continuously without damage to the output drive circuitry, but the ModuLogger battery life will be drastically reduced.

Note that the when the Output is OFF, it is merely floating, ie it is not driven to a ground (or shorted to ground) potential. This may be a consideration when driving TTL or other type inputs. A pull-down resistor (eg 10K) can be added on the terminal strip connections from the output to the common to provide a low resistance OFF state if necessary. Keep in mind if a pull-down resistor is added, that this resistor will consume power when the Output is ON.

Digital Output Signal Connections:

To utilize an MLIM-2 Output channel, connect the load positive lead to an *Output* terminal (Chan E, F, G, or H) and the load negative lead to one of the four *Common* terminals on the module terminal strip (Figure 3... -25). Note that all of the four Common terminals are interconnected and connect directly to the ModuLogger circuit ground. Refer to Chapter 7 for steps to generate a Terminal Strip Wiring printout for use in making field wiring connections.

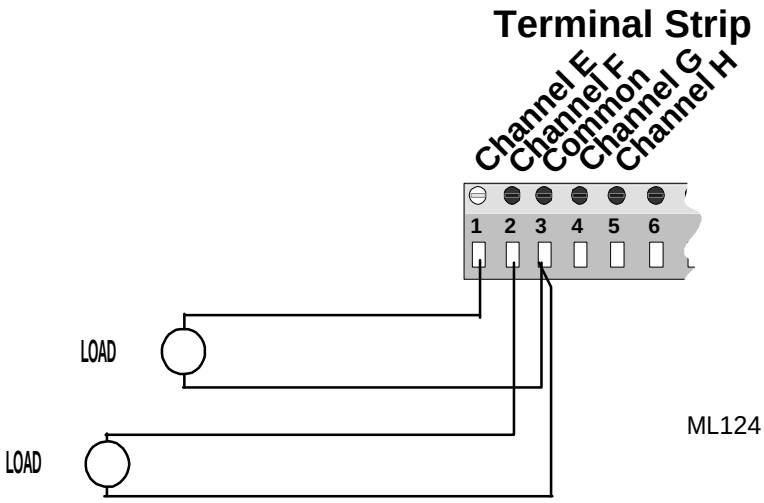

Figure 3... -25: MLIM-2 Digital output terminal strip connections

MLIM-4; RTD / RESISTANCE INTERFACE MODULE OVERVIEW

Overview

The MLIM-4 is a four channel Interface Module for use in the ModuLogger System Base. Each of the four channels can be individually programmed for any combination of RTD (100 ohm or 1000 ohm), Resistance or Thermistor input via the HyperWare software (HyperNet).

Additionally, for RTD and resistance measurements, 2, 3, and 4-Wire configurations can be selected. With 3 and 4-wire configurations, the resistance due to the extension wires is minimized. With 3 or 4-wire configuration, each sensor connection will require two input channels.

Module Installation:

Refer to the *Installation Section* earlier in this chapter for detailed installation instructions of the Interface Module onto the System Base.

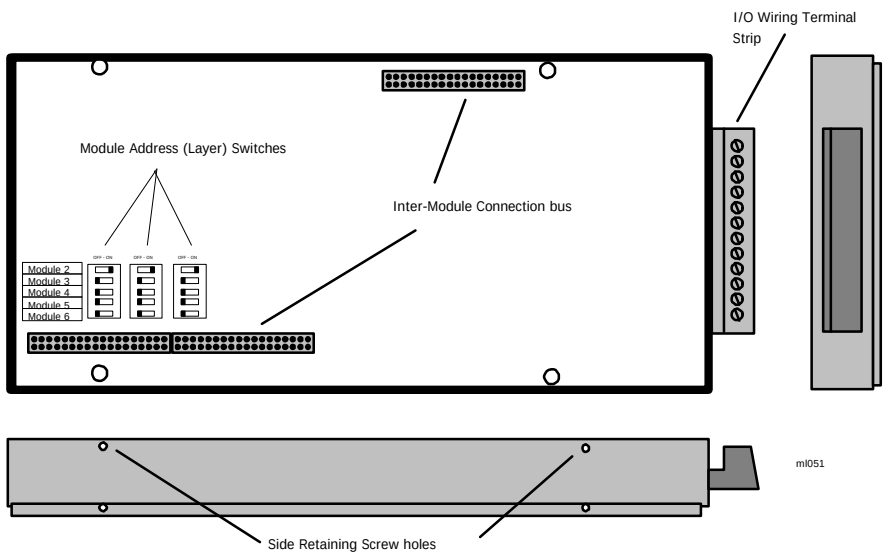

Figure 3... -26: MLIM-4 Module Address Switches

I/O Module Layer Requirements / Limitations:

The MLIM-1 module can be installed in any of the five I/O Module positions (Figure 3... -4). The module layer address must be set on the module to correspond to the layer position into which the module is installed.

This address is programmed into the module through the use of the three Module Address Switch banks (Figure 3... -26 and Figure 3... -27). Each switch bank contains 5 switches. Note the marking <u>on the circuit board</u> identifying address rows for Module Layers 2 through 5. Set one switch in each of the 3 banks ON corresponding to a module layer determined above.

Each switch bank should have only ONE switch ON and the other four

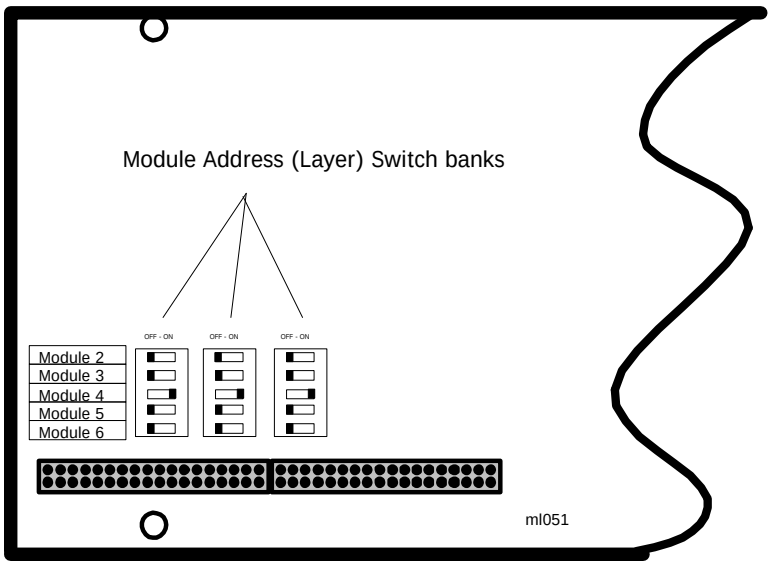

Figure 3... -27: Example Address setting for Module Layer Position 4

switches OFF.

CAUTION: The switch banks may have different numbering than the circuit board... *insure that the marking on the circuit board is followed*... not the marking on the switch banks.

Hardware Input Configuration Switches:

No hardware input configuration switches are provided on the MLIM-4. All configuration is done via the HyperNet software.

Software Configuration of the MLIM-4

The MLIM-4 module is completely configured on a channel by channel basis from within the HyperNet software. This software configuration and utilization of the various MLIM-4 channels in a Program Net is covered in overview in Chapter 6, within the Master Icon Listing in Appendix A, and with specific detail in this document.

When the MLIM-4 module is detected in a ModuLogger after clicking on the *New Program* button from within HyperNet, four icons representing the MLIM-4 input channels will display on the screen. The icons will display as 2-wire RTD inputs as the default. These icons can be switched to Resistance or Thermistor inputs by double-clicking on the icon to open the configuration dialog then on the *Change* button.

MLIM-4; RTD INPUT APPLICATION

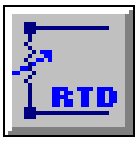

RTD Input

The RTD function of the MLIM-4 allows for the input of Platinum RTD's with any of the following characteristics:

- 100 or 1000 ohm @ 0' C
- European (0.0385) or American (0.0392) alpha coefficient curve
- 2, 3, or 4-wire configuration

The actual temperature is calculated from the resistance and can be output in either degrees C or F. Two input temperature ranges are provided for maximizing span and ultimate resolution of the readings. The RTD element resistance is measured using a constant current ratiometric technique which provides excellent accuracy and stability over time and temperature.

Refer to the Excitation Current Table for current levels utilized in the excitation of the RTD elements.

MLIM-4; THERMISTOR INPUT APPLICATION

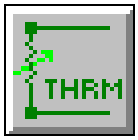

Thermistor Input

The Thermistor function of the MLIM-4 allows for the input of 10,000 ohm @ 25C NTC thermistors conforming to the Fenwall Curve 16 or equivalent RT curve.

The actual temperature is calculated from the resistance and can be output in either degrees C or F. Four input temperature ranges are provided for maximizing span and ultimate resolution of the readings. The Thermistor element resistance is measured using a constant current ratiometric technique which provides excellent stability over time and temperature. Due to the high resistance vs temperature ratio, only 2-wire configuration is provided (and required).

Refer to the Excitation Current Table for current levels utilized in the excitation of the Thermistor element under test.

MLIM-4; RESISTANCE INPUT APPLICATION

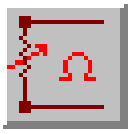

Resistance Input

The Resistance function of the MLIM-4 can measure resistances ranging from 200 ohm to 400,000 ohm full scale. 2, 3, or 4-wire configurations can be used depending on absolute accuracy requirements.

Twelve input resistance ranges are provided for maximizing span and ultimate resolution of the readings. The resistance is measured using a constant current ratiometric technique which provides excellent stability over time and temperature.

Refer to the Excitation Current Table for current levels utilized in the excitation of the resistance elements being measured.

MLIM-4; INPUT SIGNAL CONNECTION METHODS:

For all three signal types, RTD, thermistor, and resistance, a ratiometric resistance measurement technique is used. In the case of the RTD and thermistor measurements, a software conversion is then used to convert this resistance into temperature.

In measuring the resistance of a distant element with a conventional 2-wire connection configuration, the resistance of the lead wires running from the module terminal strip to the actual sensing element itself will add resistance and corresponding error. The magnitude of these errors depends on the resistance of the lead wires which is a function of wire gauge, temperature, and any connection resistance. If the resistance is small relative to the resistance being measured, this

additive lead wire resistance can be ignored (eg in thermistor or Kohm resistance measurements). However, in applications of RTDs or lower resistance ranges this lead wire resistance can add up to substantial measurement errors... especially if long runs or lighter gauge lead wire is used. For example, in a 100 ohm RTD, 0.4 ohms of lead wire resistance would translates to a reading error of 1 Deg C.

To minimize these lead wire induced errors, the MLIM-4 supports 3-wire and 4-wire connection methods. Connection diagrams and descriptions for each of the wiring methods follow.

2-Wire Configuration

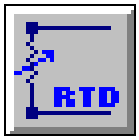

2-Wire Config

The 2-wire configuration is easiest to use and allows for utilization of all four input channels of the MLIM-4 as individual channels. All three input types, RTD, thermistor, and resistance can be measured with the 2-wire technique. For short runs, heavier gauge lead wires and/or higher resistance measurements, the 2-wire technique will provide excellent performance with minimal error.

Calculating Lead Wire Effects

To calculate resistance errors induced by lead wires in a 2-wire configuration:

1. Estimate the total length of the lead wire to be used.
2. Multiply this length by the resistance per foot of the wire to be used. Complete wire tables are available from wire manufacturers and in many electronic reference books. For general reference, an abbreviated table is included below.
   Note that wire resistances are typically given per 1000 foot.
3. Assess the effects of this resistance on the required accuracy. For RTD applications, tables are available from the manufacturer that correlate RTD element resistance to degrees over the usable range. As a general guideline, a 100 ohm RTD will have a 1 Degree C change for every 0.36 ohms, a 1000 ohm RTD will have a 1 degree C change for every 3.6 ohms (hence the increasing popularity of the 1000 ohm RTD).

Wire Gauge	ohms per 1000 ft @ 25C (77F)	ohms per 1000 ft @ 65C (149F)
26	41.6	48
24	26.2	30.2
22	16.5	19.0
20	10.4	11.9
18	6.5	7.5
16	4.1	4.7

Table 5: Typical Copper Wire resistance

2-Wire Terminal Strip Connections:

The MLIM-4 module is provided with a 12 position terminal strip. Each MLIM-4 input channel utilizes 3 of the 12 terminals (1-2-3, 4-5-6, 7-8-9, 10-11-12). Connect the input signal to the first two of the three input terminals (1-2, 4-5, 7-8, 10-11) on the terminal strip. A wire jumper must then be installed from the second to the third terminal (2-3, 5-6, 8-9, 11-12).

Refer to Chapter 6 for steps to generate a Terminal Strip Wiring printout after construction of a Program Net for use in making field wiring connections.

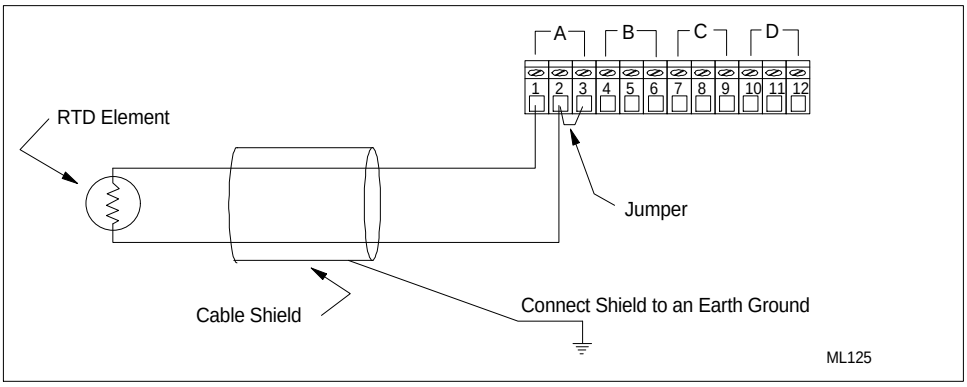

Figure 3... -28; 2-Wire Configuration

For long lead wire runs and in applications in electrically noisy environments, it is recommended that twisted pair and/or shielded wire be used. If shielded wire is used, the shield at the ModuLogger end should be connected to an external earth ground (Figure 3... -28) or if available, a grounded Shield connection provided on another type installed interface module (such as the MLIM-1).

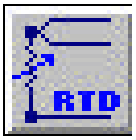

3-Wire Config

3-Wire Configuration

The 3-wire configuration is used in applications where the lead wire effects calculated as above will have a significant error inducing effect on the resistance measurement. The 3-wire configuration requires two input channels (A and B or C and D) to implement. From within the HyperNet Window, double-clicking Channel A or C icons displays a dialog and allows for selection of 2, 3, or 4-wire connection. When 3 -wire is selected, a second corresponding icon (Channel B or D) is removed as this second channel is required for the 3 -wire measurement.

3-Wire Compensation Theory:

With a 3-wire configuration, the resistance of one of the lead wires is measured, doubled and then subtracted out of the measured total element plus lead wire circuit resistance. The 3-wire configuration, as the name implies, requires the use of three discrete wires from the module terminal strip to the element. Two of the leads connect to one common end of the element and the other lead connects to the other end of the element. The 3-wire configuration provides

nearly the same level of error compensation as the 4-wire configuration with one less wire.

Due to the fact that only one of the lead wires resistance is actually measured and the other lead wire is assumed to match, in using the 3-wire configuration, it is important that both lead wires used for the excitation current (connected to terminals 1 & 2, or 7 & 8 and opposite ends of the element) are of the same approximate length, same gauge, and operating at the same temperature. The third lead (connected to terminal 4 or 10) can be of lighter gauge if desired as a very low current flows through it.

3-Wire Terminal Strip Connections:

As can be seen in the 3-Wire Wiring Diagram, each channel

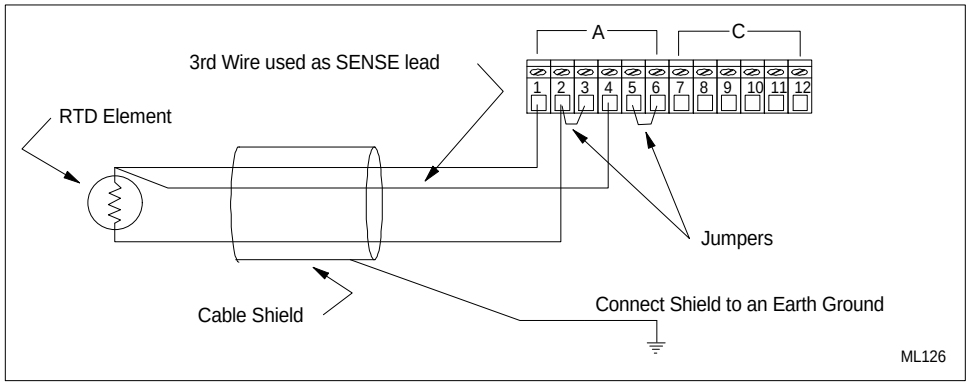

Figure 3... -29: 3-Wire Configuration

requires 6 of the 12 terminals. Channel A uses terminals 1 through 6, and Channel C uses terminals 7 through 12.

Two matching gauge Excitation wires should connect from opposite ends of the element and to terminals 1-2 or 7-8 on the module terminal strip. A third Sense wire then connects from the element (sharing the connection with a lead from terminal 1 or 7 on the terminal strip) to terminal location 4 or 10. Two wire jumpers must then be installed connecting terminals 2-3 and 5-6 for Channel A and 8-9 and 11-12 for Channel C.

Refer to Chapter 6 for steps to generate a Terminal Strip Wiring printout after construction of a Program Net for use in making field wiring connections.

For long lead wire runs and in applications in electrically noisy environments, it is recommended that twisted pair and/or shielded wire be used. If shielded wire is used, the shield at the ModuLogger end should be connected to an external earth ground (Figure 3... -29) or if available, a grounded Shield connection provided on another type installed interface module (such as the MLIM-1).

4-Wire Config

4-Wire Configuration

The 4-wire configuration is used in applications where the lead wire effects calculated as above will have a significant error inducing effect on the resistance measurement. The 4-wire configuration provides the best compensation for lead wire resistance at the expense of running a 4th lead. The 4-wire configuration requires two input channels (A and B or C and D) to implement. From within the HyperNet Window, double-clicking Channel A or C icons displays a dialog and allows for selection of 2, 3, or 4-wire connection. When 4-wire is selected, a second corresponding icon (Channel B or D) is removed as this second channel is required for the 4-wire measurement.

4-Wire Compensation Theory:

With a 4-wire configuration, the excitation current flows to and from the element through one pair of leads. The actual voltage developed across the element is then measured using a second pair of Sense leads that conduct a very small amount of current (hence adding negligible I * R voltage measurement error) .

The 4-wire configuration, as the name implies, requires the use of four discrete wires from the module terminal strip to the element. Two of the leads connect to one end of the element and the other two to the other end of the element.

Due to the fact that the excitation current flows through a separate pair of leads, wire gauge, temperature effects, and connection resistance has no effect on the accuracy of the readings. The Sense leads (connected to terminals 4-5 or 10-11) can be of lighter gauge if desired as a very low current flows through them.

4-Wire Terminal Strip Connections:

As can be seen in the 4-Wire Wiring Diagram, each channel requires 6 of the 12 terminals. Channel A uses terminals 1 through 6, and Channel C uses terminals 7 through 12.

The Excitation wires connect from opposite ends of the element and to terminals 1-2 or 7-8 on the terminal strip. A second pair of Sense wires then connects from opposite ends of the element to terminals 4-5 or 10-11. A wire jumper must then be installed connecting terminals 2-3 for Channel A and 8-9 for Channel C.

Refer to Chapter 6 for steps to generate a Terminal Strip Wiring printout after construction of a Program Net for use in making field wiring connections.

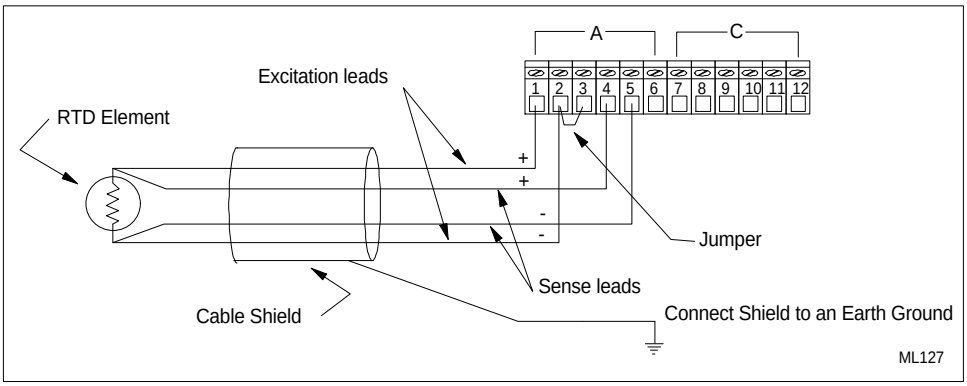

Figure 3... -30: 4-Wire Configuration

For long lead wire runs and in applications in electrically noisy environments, it is recommended that twisted pair and/or shielded wire be used. If shielded wire is used, the shield at the ModuLogger end should be connected to an external earth ground (Figure 3... -30) or if available, a grounded Shield connection provided on another type installed interface module (such as the MLIM-1).

Range	Excitation Current	Range	Excitation Current
Res 200 ohm	1 mA	Res 200,000 ohm	10 uA
Res 200 ohm	10 mA	Res 400,000 ohm	10 uA
Res 400 ohm	1 mA	RTD-100 ohm 300C	1 mA
Res 400 ohm	10 mA	RTD-100 ohm 850C	1 mA
Res 2000ohm	100 uA	RTD-1000 ohm 300C	100 uA
Res 4000 ohm	100 uA	RTD-1000 ohm 850C	100 uA
Res 10,000 ohm	100 uA	Therm -32 to 250C	10 uA
Res 20,000 ohm	100 uA	Therm -4 to 250C	10 uA
Res 40,000 ohm	10 uA	Therm +10 to 250C	10 uA
Res 100,000 ohm	10 uA	Therm +25 to 250C	100 uA

Excitation Currents used for MLIM-4 Ranges

NOTES:

MLIM-8; DIGITAL I/O INTERFACE MODULE OVERVIEW

Overview:

The MLIM-8 is an eight channel Interface Module for use in the ModuLogger System Base. Each of the eight channels can be individually programmed for any combination of Event input or Digital output via the HyperWare software (HyperNet).

Module Installation:

Refer to the *Installation Section* earlier in this chapter for detailed installation instructions of the Interface Module onto the System Base.

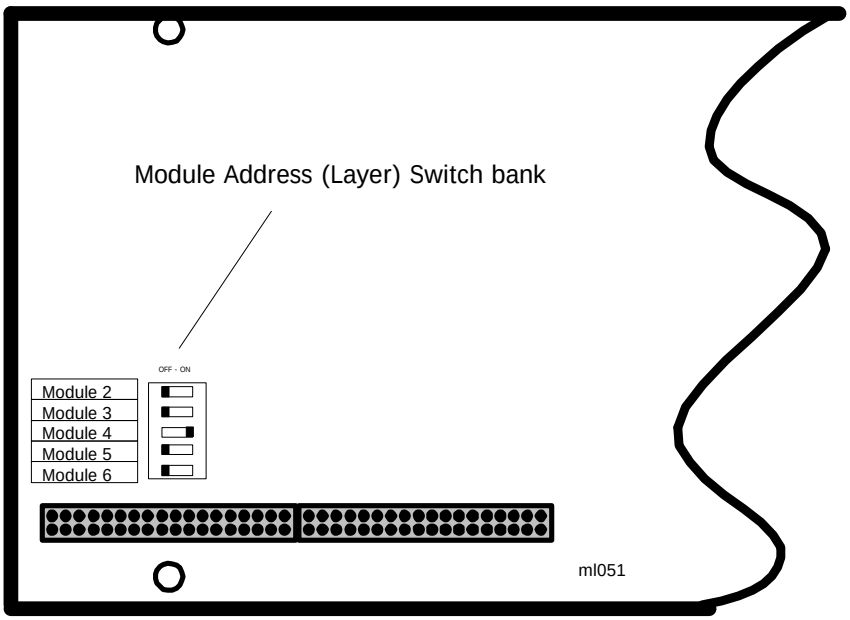

Figure 3... -31: MLIM-8 Module Address Switch Bank

I/O Module Layer Requirements / Limitations:

The MLIM-8 module can be installed in any of the five I/O Module positions (Figure 3... -4). The module layer address must be set on the module to correspond to the layer position into which the module is installed.

This address is programmed into the module through the use of the Module Address Switch bank (Figure 3... -31). The switch bank contains 5 switches. Note the marking on the circuit board identifying address rows for Module Layers 2 through 5. Set one switch in the bank ON corresponding to a module layer determined above. The switch bank should have only ONE switch ON and the other four switches OFF.

CAUTION: The switch bank may have different numbering than the circuit board... *insure that the marking on the circuit board is followed*... not the marking on the switch banks.

Hardware Input Configuration Switches:

No hardware input configuration switches are provided on the MLIM-8. All configuration is done via the HyperNet software (with the exception of the Module Address setting discussed above).

Software Configuration of the MLIM-8:

The MLIM-8 module is completely configured on a channel by channel basis from within the HyperNet software. This software configuration and utilization of the various MLIM-8 channels in a Program Net is covered in Chapter 7, within the Master Icon Listing in Appendix A, and within this document.

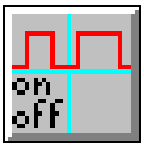

Event icon (MLIM-8)

MLIM-8; EVENT INPUT APPLICATION

The Event function of the MLIM-8 allows for the recording of the state of an ON/OFF type input. Configured as an Event input, a channel will accept a powered input signal (ranging from 0 to a maximum of 26VDC) or a contact closure (dry contact) input.

- For powered input signals, the MLIM-8 Event function defines signals less than 1VDC as a Low level and greater than 4VDC (26VDC max) as a High level.
- For contact closure type inputs, power is automatically supplied from the MLIM-8 channel circuitry via a 100Kohm pull-up resistor (R1 in Figure 3... -32).

Channel input impedance is greater than 30K ohm.

A 40mS debounce circuit can be enabled via software which can be used to filter out `contact bounce' (Refer to the Master Icon Listing in Appendix A for details).

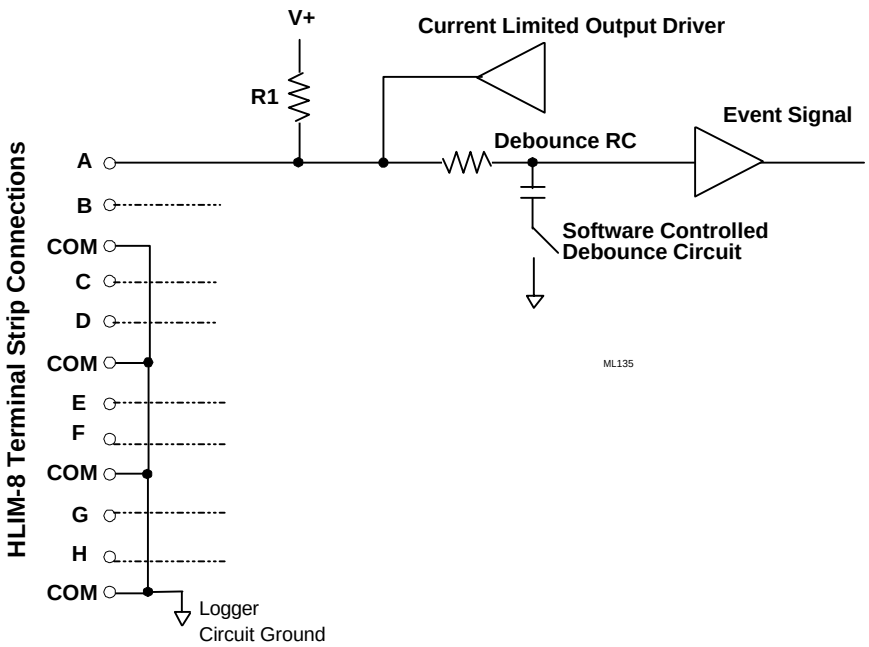

Figure 3... -32: Simplified schematic of MLIM-8 input/output channel (single channel shown)

Event Input Signal Connections:

To utilize an MLIM-8 channel as an Event input, connect the input signal positive lead to an *Input* terminal (Chan A, B, C, D, E, F, G, or H) and the

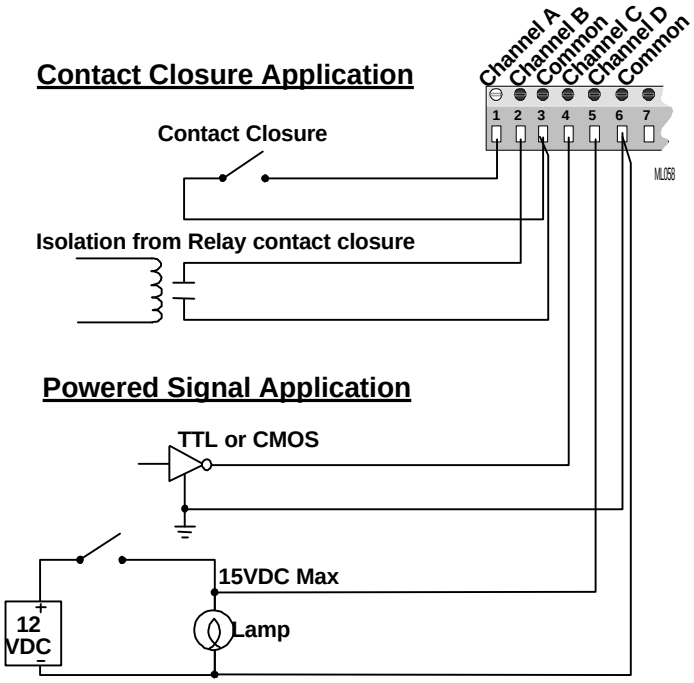

Figure 3... -33: Contact closure and Powered type Event signal input

negative lead to one of the four *Common* terminals on the module terminal strip (Figure 3... -33). Note that all of the four Common terminals on the terminal strip (3, 6, 9, 12) are interconnected and connect directly to the ModuLogger circuit ground. Refer to Chapter 7 for steps to generate a Terminal Strip Wiring printout for use in making field wiring connections.

> ***CAUTION:*** *Note that a direct connection exists between the common (-) terminal on all eight channels of the MLIM-8. When connecting to multiple event signal sources sharing a common ground or reference, insure that the source's ground or reference is connected to the terminal strip `common' terminal to prevent shorting out of the source signal and possible damage to the MLIM-8.*

For most event applications, shielding is not necessary due to the relatively low input impedance of the channel and the high noise immunity of the MLIM-8 channel input.

-

MLIM-8; DIGITAL OUTPUT APPLICATION

Digital Output icon (MLIM-8)

An MLIM-8 channel configured as a Digital Output can provide an ON/OFF voltage signal for alarming applications. The output is a current limited voltage signal with the approximate voltage/current characteristics shown in Figure 3... -34. As shown, with a light load, the output voltage maintains approximately 4+ VDC but as the

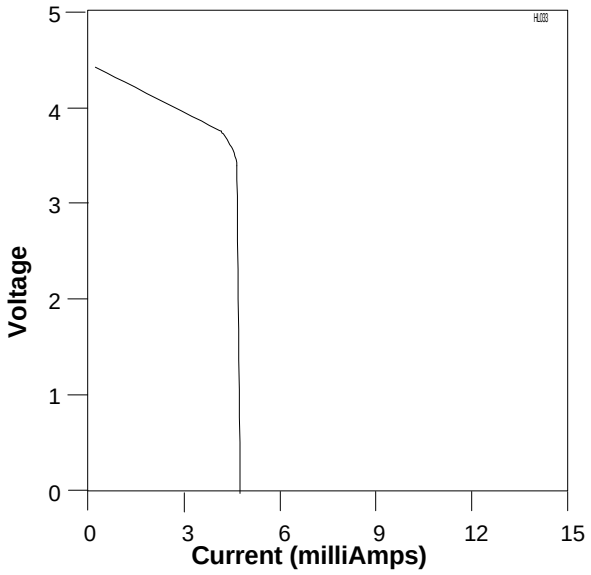

Figure 3... -34: MLIM-8 Digital output drive characteristics

current draw increases, current limiting occurs and the output voltage droops. The output can be short circuited continuously without damage to the output drive circuitry, but the ModuLogger battery life will be correspondingly reduced.

Digital Output Signal Connections:

To utilize an MLIM-8 channel as a Digital Output, connect the load positive lead to an *Output* terminal (Chan A, B, C, D. E, F, G, or H) and the load negative lead to one of the four *Common* terminals on the module terminal strip (Figure 3... -35). Note that all of the four Common terminals are interconnected and connect directly to the ModuLogger circuit ground (see Figure 3... -32). Refer to Chapter 7 for steps to generate a Terminal Strip Wiring printout for use in making field wiring connections.

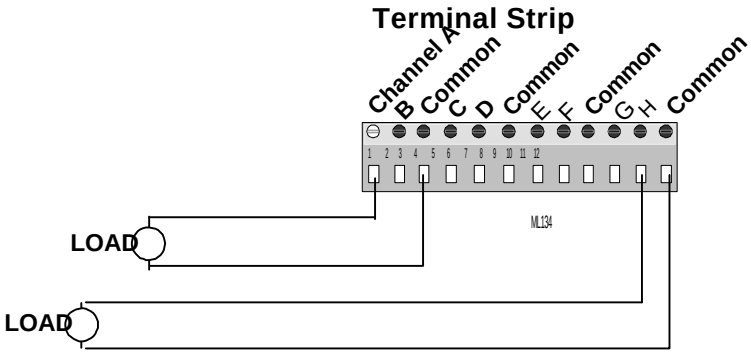

Figure 3... -35: MLIM-8 terminal strip connections (configured as outputs)

NOTES

MLIM-5; PCMCIA MEMORY CARD MODULE

Overview:

The MLIM-5 is a special function Interface Module for use with the ModuLogger System Base. The MLIM-5 provides capability to record data to a removable SRAM based memory card (Logic Beach Part Numbers; MC-50, MC-100, MC-200) rather than to internal ModuLogger memory. The data on the collected memory card can then be read viaa serial connection to the logger (modem or RS-232) or removed and inserted/read with a PD-1, PCMCIA Drive, installed (connected to) on a PC.

The MLIM-5 can also be provided with a 2400B (P/N: MLIM-5-2400) or 14.4Kbaud modem (P/N: MLIM-5-144). This section's PCMCIA discussion is pertinent to these modules and the modem aspects are detailed in following sections.

Module Installation:

Installation of the MLIM-5 into the ModuLogger System Base is unique in that it requires a special set of signals only available from the connector on the MLCPU-1 module. For this reason, the MLIM-5 can only be installed between the MLCPU-1 module and the MLAD-1 module as shown in Figure 3... -4.

Refer to the *Installation Section* earlier in this chapter for detailed installation instructions for installing the Module into the System Base.

Configuration of the MLIM-5:

The presence of a MLIM-5 is detected automatically by the ModuLogger upon power-up. No additional software or hardware configuration of the module is necessary.

If the ModuLogger is equipped with a ML-DISP display module, detection and initialization of the MLIM-5 can be observed on the LCD at power-up. In loggers so equipped, at power-up, a *Modem Baud Rate Test...* message will display indicating that the logger has detected the presence of the MLIM-5 card and is testing it for modem presence. After a short wait, the display will indicate *No Modem Detected, 2400 Baud Modem Detected*, or *14.4 Baud Modem Detected* as the case may be...then proceed to further initialization steps.

Operation of the MLIM-5 and PCMCIA Memory Card:

For full details on the configuration and use of the PCMCIA card, refer to Chapter 6.

NOTE

Numerous types of PCMCIA cards are currently available on the market utilizing various technologies. To insure compatibility with the MLIM-5, utilize only Logic Beach supplied memory cards or verify alternate parts compatibility with Logic Beach Technical Support prior to plugging into the ModuLogger.

MLIM-5-2400; PCMCIA AND 2400B MODEM MODULE

Overview:

The MLIM-5-2400 module provides PCMCIA memory card support as discussed in the MLIM-5 section and also provides 1200/2400 Baud telephone modem communications capability. Installation of this module will allow the full complement of serial communications/ control of the ModuLogger from a remotely located PC equipped with a modem. Additionally, loggers equipped with a modem can utilize the Pager Alarm Output feature from within HyperWare (see Appendix A).

The MLIM-5-2400 incorporates a low power modem, drawing approximately 50mA during operation (off-hook) and 0 mA while quiescent (on-hook).

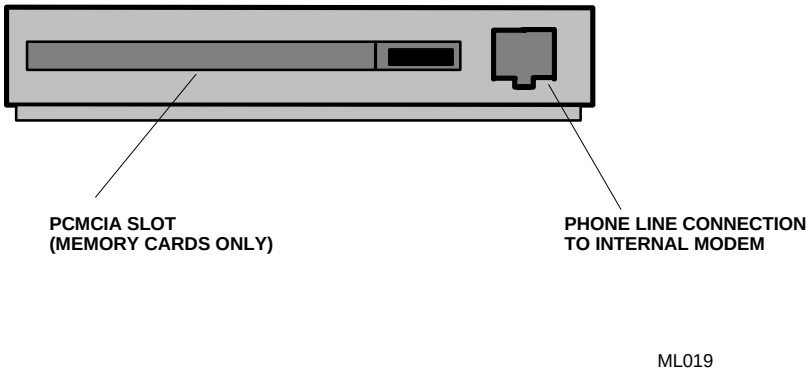

Figure 3... -36: MLIM-5-2400 (or -144)

Module Installation:

Installation of the MLIM-5-2400 into the ModuLogger System Base is unique in that it requires a special set of signals only available from the connector on the MLCPU-1 module. For this reason, the MLIM-5-2400 can only be installed between the MLCPU-1 module and the MLAD-1 module as shown in Figure 3... -4.

Refer to the *Installation Section* earlier in this chapter for detailed installation instructions for installing the Module into the System Base.

Configuration of the MLIM-5-2400:

The presence of a MLIM-5 is detected automatically by the ModuLogger upon power-up. No additional software or hardware configuration of the module is necessary.

Telephone Line Connection:

A standard voice grade telephone line can be used with the MLIM-5-2400. The two phone conductors (tip and ring) can be connected to the MLIM-5-2400 via the modular phone jack on the end of the module. Polarity is not critical for either connection method.

Plug a telephone cord equipped with a 6/2 modular phone plug (RJ-12 type) into the modular phone socket accessible at the end of the module (Figure 3... -36). Insure that the phone conductors are installed into the center two locations of the plug (polarity is not critical).

Various length phone extension cords with the RJ-12 type modular phone plugs on each end are readily available from most phone supply stores. Insure that the `telephone base' type cord is used... not the `handset' cord as the handset plug is smaller and will not effect a good connection.

Plug the other end of the phone cord into the telephone wall jack.

Hardware Configuration Switches:

No hardware configuration switches are provided on the MLIM-5-2400. All configuration is done via the HyperWare software.

Operation of the MLIM-5-2400:

The presence of the installed MLIM-5-2400 is detected automatically by the ModuLogger upon power-up. If the ModuLogger is equipped with a ML-DISP display module, detection and initialization of the MLIM-5-2400 can be observed on the LCD.

In loggers so equipped, at power-up, a *Modem Baud Rate Test...* message will display indicating that the logger has detected the presence of the MLIM-5 card and is testing it for modem presence. After a short wait, the display will indicate that a 2400 Baud modem has been detected.

The MLIM-5-2400 is self-configuring with the exception of one parameter... the number of rings before the ModuLogger answers an incoming call. This parameter is set from within HyperNet (the Global icon) and is thoroughly explained within the Master Icon Listing in Appendix A under the Global icon section.

Additional information on the setup and configuration of the modem located at the PC is provided in Appendix K.

MLIM-5-144; PCMCIA AND 14.4K BAUD MODEM MODULE

Overview:

The MLIM-5-144 module provides PCMCIA memory card support as discussed in the MLIM-5 section and also provides 1200, 2400, 4800, 9600, and 14400 Baud telephone modem communications capability. Installation of this module will allow the full complement of serial communications/ control of the ModuLogger from a remotely located PC equipped with a modem. Additionally, loggers equipped with a modem can utilize the Pager Alarm Output feature from within HyperWare (see Appendix A).

The MM-14.4 is a low power modem, drawing approximately 125mA during operation (off-hook) and 0 mA while quiescent (on-hook).

Installation / Operation:

The MM-14.4 is installed and configured identically to the MLIM-5-2400. Refer to the MLIM-5-2400 installation and configuration instructions in the previous section for details.

Additional information on the setup and configuration of the modem located at the PC is provided in Appendix K.

NOTES: